PIONEERS MEMORIAL HEALTHCARE DISTRICT

207 W LEGION RD., BRAWLEY, CA 92227
FACILITY ID #10192

MATERIAL TESTING AND CONDITION ASSESSMENT PROGRAM (MTCAP) FOR ADMINISTRATION WING - BLDG 2 (BLD-00767)

HCAI PROJECT No.: S260022-13-00

SHEET LIST - HCAI LA CONSTRUCTION DOCUMENTS

SHEET NUMBER	SHEET NAME
T-001	TITLE SHEET
G-001	GENERAL NOTES
G-002	MATERIAL TESTING AND CONDITION ASSESSMENT SUMMARY
A-101	ARCHITECTURAL FIRST FLOOR PLAN
A-102	ARCHITECTURAL ROOF PLAN
A-103	ARCHITECTURAL PENTHOUSE ROOF PLAN
S-101	FOUNDATION AND FIRST FLOOR PLAN
S-102	ROOF FRAMING PLAN
S-103	PENTHOUSE FRAMING PLAN
S-801	TYPICAL MTCAP TESTING AND REPAIR DETAILS
S-802	CONDITION ASSESSMENT DETAILS
S-803	CONDITION ASSESSMENT DETAILS

Grand total: 12

BUILDING GENERAL NOTES

1. PER ARCHITECTURAL FLOOR PLANS FOR ROOM LOCATIONS IMPACTED BY CONSTRUCTION.
2. DEPARTMENT OPERATIONS, ADJACENCIES AND CIRCULATION WILL NOT BE IMPACTED BY THE MTCAP CONSTRUCTION.
3. ALL HOSPITAL DEPARTMENTS WILL REMAIN OPERATIONAL DURING THE MTCAP CONSTRUCTION.

SCOPE OF WORK

WORK SHALL SATISFY THE HCAI APPROVED MATERIAL TESTING AND CONDITION ASSESSMENT PROGRAM (MTCAP) FOR ADMINISTRATION WING - BLDG 02 (BLD-00767) UNDER HCAI PROJECT # SER-2025-00021.

WORK SHALL INCLUDE:

1. EXTRACTION OF SAMPLES AND VERIFICATION OF EXISTING CONDITIONS FOR LABORATORY TESTING OR CONDITION ASSESSMENT TO SATISFY MTCAP.
2. REPAIR THE AREAS ALTERED FOR EXTRACTING SAMPLES OR CONDITION ASSESSMENT BACK TO ORIGINAL STATE AS INDICATED ON THESE DOCUMENTS AND MTCAP.
3. PROVIDE MEANS AND METHOD DURING SAMPLE EXTRACTIONS AND CONDITION ASSESSMENTS TO SATISFY THESE DOCUMENTS AND MTCAP.

BUILDING INFORMATION

HCAI FACILITY ID	10192
HCAI BUILDING NUMBER	00767
HCAI PROJECT NUMBER	S260022-13-00
SPC/NPC RATING	SPC-4D/NPC-2
ZONING	EXISTING - NO CHANGE
CONSTRUCTION DATE	1969
FIRE SPRINKLER	EXISTING - NO CHANGE
BUILDING HEIGHT	1-STORY & PENTHOUSE
TOTAL SQUARE FOOTAGE	± 11900 SF
CONSTRUCTION TYPE	IIA
OCCUPANCY GROUP	I-2

VICINITY MAP

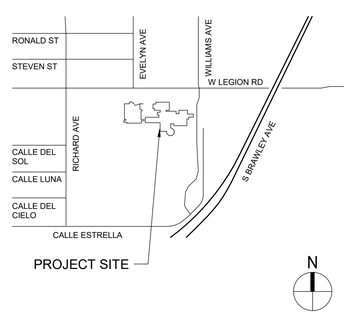

CAMPUS SITE

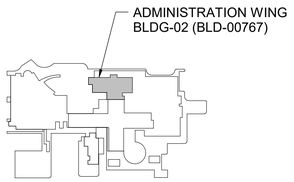

walter p moore

Walter P Moore and Associates, Inc.
633 West 5th St, Suite 7200
Los Angeles, CA 90071

310.254.1900

PIONEERS MEMORIAL HEALTHCARE DISTRICT

FACILITY ID : 10192

207 W LEGION RD,
BRAWLEY, CA 92227

Project :

MATERIAL TESTING AND CONDITION ASSESSMENT PROGRAM (MTCAP)
FOR
BLD-00767
ADMINISTRATION WING
-BLDG 02

S09-24035-00

REVIEWED IN ACCORDANCE WITH THE REQUIREMENTS OF T24, CCR
APPROVED
Department of Health Care Access and Information
Office of Statewide Hospital Planning and Development
3/5/2026, 9:42:20 AM
S260022-13-00
Jacqueline Vu-Sancho

HCAI# S260022-13-00

Keyplan :

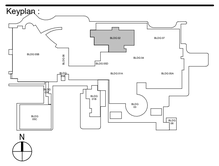

Issues/Revisions :

No.	Date	Description

Project Number : S09-24035-00
Approved By : Approver
Drawn By : Author
Checked By : Checker

Certification Statement :
TO THE BEST OF THE ENGINEER'S KNOWLEDGE, THE PLANS AND SPECIFICATIONS COMPLY WITH THE APPLICABLE MINIMUM BUILDING CODES.

Seal and Signature :

REGISTERED PROFESSIONAL ENGINEER
DHAVAL AGARWAL
5954
EXP. 12/31/2027
CIVIL
STATE OF CALIFORNIA

Engineer of Record, P.E.
Professional Engineer No.

Copyright (c) 2008 by Walter P. Moore and Associates, Inc.

This document and the information herein is the property of Walter Moore and Associates, Inc. No part hereof shall be duplicated, distributed, disclosed or used to any extent except as expressly authorized by Walter P. Moore and Inc. Any person, firm, or corporation receiving this however obtained, shall by virtue hereof, be deemed to have to the forgoing restrictions and that this document will be held in and confidence subject only to the private use expressly by Walter P. Moore and Associates,

Drawing Title:

TITLE SHEET

Filename :

Sheet No. :

T-001

GENERAL STRUCTURAL NOTES

PART I - BUILDING CODES & REGULATIONS

2025 CALIFORNIA BUILDING STANDARDS ADMINISTRATIVE CODE
PART 1, TITLE 24, CALIFORNIA CODE OF REGULATIONS (CCR)

2025 CALIFORNIA BUILDING CODE
PART 2, TITLE 24, CCR

2025 CALIFORNIA ELECTRICAL CODE
PART 3, TITLE 24, CCR
BASED ON 2023 NATIONAL ELECTRICAL CODE (NEC)

2025 CALIFORNIA MECHANICAL CODE
PART 4, TITLE 24, CCR
BASED ON 2024 UNIFORM MECHANICAL CODE (UMC)

2025 CALIFORNIA PLUMBING CODE
PART 5, TITLE 24, CCR
BASED ON 2024 UNIFORM PLUMBING CODE (UPC)

2025 CALIFORNIA FIRE CODE
PART 9, TITLE 24, CCR
BASED ON 2024 INTERNATIONAL FIRE CODE (IFC)

PART II - FIRE MARSHAL NOTES

1. FIRE RESISTIVE REQUIREMENTS PER TABLE 601 CBC SHALL BE PROVIDED WITHIN THE CONSTRUCTION LIMITS OF THE PROJECT.
2. MAINTAIN RATING WHERE ELECTRICAL PANELS, LIGHT FIXTURES, FIRE EXTINGUISHER CABINETS, TOILET ACCESSORIES, ETC. OCCUR IN RATED PARTITIONS OR CEILINGS.
3. FIRE STOPPING:
   A. PROVIDE INSULATION WITH FLAME SPREAD OF NOT MORE THAN 25 AND A SMOKE-DEVELOPED RATING OF NOT MORE THAN 50 WHEN TESTED AS A COMPOSITE INSTALLATION INCLUDING INSULATION, FACING MATERIALS, TAPES AND ADHESIVES AS NORMALLY APPLIED TO EXTERIOR SURFACE OF DUCTS.
   B. SEAL ALL PENETRATIONS THROUGH RATED WALLS AND FLOORS WITH A MATERIAL CAPABLE OF PREVENTING THE PASSAGE OF FLAMES AND HOW GASSES WHEN SUBJECTED TO THE REQUIREMENTS OF THE TEST STANDARD SPECIFIC OF FIRE STOPS U.L. 1479.
4. FINISHES:
   A. ALL FLOOR FINISHES SHALL BE CLASS 1 PER NFPA 253. FLAME SPREAD RATING FOR WALL AND CEILING FINISHES SHALL NOT EXCEED 25. (SEE ALSO ITEM C BELOW).
   B. ANY DECORATIONS USED SHALL BE NONCOMBUSTIBLE OR FLAME PROOFED IN AN APPROVED MANNER
   C. ALL FINISH MATERIALS SHALL COMPLY WITH THE REQUIREMENTS OF CBC CHAPTER 8, SECTION 803.1.1 AND TABLE 803.11.
   D. ALL EXTERIOR AND INTERIOR WALL INSULATION SHALL BE NONCOMBUSTIBLE.
5. EXIT SIGNS AND COMMUNICATION:
   A. PROVIDE APPROVED ILLUMINATED EXIT SIGNS SELF-POWERED OR ELECTRICALLY ILLUMINATED AND ENERGIZED FROM SEPARATE CIRCUITS; ONE OF WHICH TO BE PART OF THE CRITICAL EMERGENCY SYSTEM (TO ENERGIZE WITHIN ONE SECOND OF A POWER FAILURE). EXIT PATH LIGHTING TO BE PART OF THE EMERGENCY SYSTEM (ON UPS BACKUP, SEE ELECTRICAL FIXTURE SCHEDULE)
6. ALL LOCATIONS OF TEMPORARY EXITING AND CONSTRUCTION BARRIERS, MUST BE APPROVED BY HCAI FIELD FIRE LIFE SAFETY OFFICER PRIOR TO START OF CONSTRUCTION CAN 9-3301.
7. ALL FIREWATCH ARRANGEMENTS; SHALL BE APPROVED BY HCAI FIELD FIRE LIFE SAFETY OFFICER PRIOR TO START OF CONSTRUCTION PIN 14.

PART III - LIFE SAFETY / EXITING / FIRE WATCH

1. WORK PERFORMED IN EXIST PATHS OR CORRIDORS SHALL UTILIZE A FABRIC ENCLOSURE OR MOBILE CONTAINMENT SYSTEM THAT CAN BE MOVED FROM SITE-TO-SITE.
2. ANY FIXED DUST BARRIER SHALL NOT OBSTRUCT MORE THAN 24" WIDTH OF CORRIDOR. TEMPORARY CONSTRUCTION AND DUST BARRIERS ARE TO MEET THE REQUIREMENTS OF HCAI CAN 9-3301, 2025 CBC SECTION (703.3) AND 2025 CFC SECTION (701.2).
3. DURING CONSTRUCTION, EXIT SIGNS SHALL REMAIN VISIBLE AT ALL TIMES. IN THE EVENT THAT AN EXIT SIGN IS OBSTRUCTED DURING CONSTRUCTION, CONTRACTOR SHALL PROVIDE TEMPORARY SIGNAGE.
4. ALL ISLES THAT ARE REQUIRED EXITS OR PUBLIC RIGHT-OF-WAY SHALL HAVE MINIMUM OF 44" CLEAR DIMENSION.
5. THE MAJORITY OF MATERIAL TESTING LOCATIONS ARE IN PUBLIC CORRIDORS OR EXIT STAIRS. A FIRE WATCH SHALL BE UTILIZED DURING THE EXECUTION OF THIS WORK AS REFERENCED IN CHAPTER 33, SECTION 3304.5 OF 2025 CFC. "ALL LOCATIONS OF TEMPORARY CONSTRUCTION BARRIERS AND EXITING MUST BE APPROVED BY OSHPD FIELD FIRE MARSHAL PRIOR TO START OF CONSTRUCTION CAN 9-3301."
6. EACH TEST SITE THAT IMPACTS RATED FIRE/SMOKE PARTITIONS REQUIRES OPENING WALLS. RESTORATION OF EXISTING FIRE/SMOKE ARTITIONS WILL TYPICALLY CONSIST OF THE PLACEMENT OF FULLY SOLID NON-SHRINK GROUTED FILL WITHIN MASONRY WALL CAVITY AS A CONTINUOUS OPERATION IN ORDER TO MINIMIZE ANY COMPROMISED INTEGRITY OF RATED PARTITIONS.
7. PROVIDE 44 INCH MINIMUM AISLES TO REQUIRED EXITS IN PUBLIC AREAS CONTAINING PORTABLE FURNISHING.
8. VERIFY THAT ALL DOORS AND DOOR HARDWARE MEET THE REQUIREMENTS OF THE CALIFORNIA CODE OF REGULATIONS (CCR), SECURITY CODE AND ALL OTHER GOVERNING COOES AND STANDARDS, NOTIFY THE ARCHITECT IMMEDIATELY IN CASE OF DISCREPANCY.

PART IV - DUST / INFECTION CONTROL / INTERIOR BARRICADES

1. CONTRACTOR TO MAINTAIN CONTINUOUS DUST ABATEMENT PROCEDURES INCLUDING VACUUMING, TRASH REMOVAL, AND MATS AT ALL TIMES. PROVIDE EFFECTIVE DUST CONTROL ACCEPTABLE TO CALIFORNIA OSHA AND LOCAL BUILDING SAFETY DEPARTMENT.
2. IF THERE IS EVIDENCE OR DISCOVERY OF ASBESTOS IN AREAS OF WORK, CONTRACTOR SHALL REFER TO OWNER'S REPRESENTATIVE FOR POLICY AND PROCEDURE APPROPRIATE ACTION. ACTION SHALL INCLUDE AT A MINIMUM:
   A. CONDUCTING TESTS
   B. SECURING AN ASBESTOS ABATEMENT CONTRACTOR
   C. DOCUMENTATION OF WORK PERFORMED
   D. PERSONNEL SHALL EXERCISE PROPER PRECAUTIONS AROUND AREAS OF KNOWN ASBESTOS DANGER.
   E. INSTALL SIGNS AND BARRIERS APPROPRIATE TO PREVENT UNAUTHORIZED ENTRY
   F. PROVIDE AIR MONITORING DURING ABATEMENT

PART V - ARCHITECTURAL FINISHES

THE FOLLOWING NOTES OUTLINE ARCHITECTURAL FINISH CONDITIONS:
1. FOR SAMPLES TAKEN ABOVE CEILINGS:
   A. CEILING MATERIALS SHALL MATCH EXISTING MATERIALS AND CONSTRUCTION METHODS AND DETAILS.
   B. PAINT SELECTION FOR CEILING SHALL MATCH EXISTING.
   C. FOR CEILING ACCESS AREAS RESTORE THE FRAMING TO MATCH THE EXISTING FRAMING DETAILS.
   D. RESTORE/REHANG OVERHEAD LIGHT FIXTURES AND RESTORE POWER AND DATA IN WORK AREA
2. FOR SAMPLES TAKEN IN STAIRWAY WALLS:
   A. WALL CONSTRUCTION IS TYPICALLY CONCRETE WITH PAINTED INTERIOR FINISH.
   B. WALL PATCHING WILL REQUIRE INSTALLING NON-SHRINK GROUT. PAINT SELECTION SHALL MATCH EXISTING AS SPECIFIED BY OWNER.
3. FOR SAMPLES TAKEN IN FLOOR SLAB:
   A. FLOOR COVERING SHALL MATCH EXISTING MATERIALS.
   B. BOTH FINISHES WILL REQUIRE REPLACEMENT OF SIMILAR MATCHING VCT OR PATCHING OF SHEET VINYL. CONSULT HOSPITAL REPRESENTATIVE FOR SPECIFICATIONS OF EXISTING MATERIALS FOR REPLACEMENT
4. FOR SAMPLES TAKEN IN TYPICAL INTERIOR WALLS:
   A. WALL CONSTRUCTION IS TYPICALLY CONCRETE WITH WALL FRAMING AND PLASTER IN AREAS. PAINTED.
   B. WALL PATCHING WILL REQUIRE INSTALLING NON-SHRINK GROUT APPLYING PLASTER FINISH.PAINT SELECTION SHALL MATCH EXISTING AS SPECIFIED BY OWNER.

PART VI - OTHER PROVISIONS:

1. REMOVE OR ISOLATE HVAC SYSTEM SERVING AREA IMPACTED.
2. COMPLETE ALL CRITICAL BARRIERS TO SEAL THE AREA OF WORK BEFORE WORK BEGINS.
3. MAINTAIN NEGATIVE AIR PRESSURE WITHIN WORK SITE UTILIZING HEPA EQUIPPED AIR FILTRATION UNITS.
4. PLACE DUST MAT AT ENTRANCE AND EXIT OF WORK AREA.
5. CONTAIN CONSTRUCTION WASTE IN SEALED RECEPTACLES BEFORE TRANSPORT REMOVAL.
6. SEAL HOLES, PIPES, CONDUITS, AND PUNCTURES APPROPRIATELY.
7. DO NOT REMOVE BARRIERS FROM WORK AREA UNTIL COMPLETED PROJECT IS THOROUGHLY CLEANED.
8. VACUUM WORK AREA WITH HEPA FILTERED VACUUMS.
9. WET MOP AREA WITH DISINFECTANT.
10. REMOVE ISOLATION OF HVAC SYSTEM.

PART VII - CONCRETE

1. ALL CEMENT SHALL CONFORM TO ASTM C-150, TYPE I OR II.
2. FINE AND COARSE AGGREGATE SHALL CONFORM TO ASTM C-33.
3. CONCRETE SHALL HAVE THE FOLLOWING MINIMUM 28 DAY STRENGTH:
   A. STONE CONCRETE U.N.O. - 4,000 PSI
4. CONCRETE DESIGN MIXES SHALL BE PREPARED BY THE APPROVED TESTING LAB PER ACI 318, SECTION 26.4.2 AND APPROVED BY THE STRUCTURAL ENGINEER AND HCAI PRIOR TO POUR.
5. PLACING OF ALL CONCRETE SHALL BE INSPECTED BY THE JOB INSPECTOR. INSPECTOR TO VERIFY THAT REINFORCING STEEL IS SECURELY SUPPORTED IN PLACE DURING THE POUR.
6. NOTIFY THE STRUCTURAL ENGINEER 48 HOURS MINIMUM PRIOR TO ALL POURS.
7. ALL CONCRETE SHALL BE VIBRATED IN PLACE DURING PLACING OF CONCRETE.
8. NO STAKES, STEEL OR WOOD, SHALL BE PERMITTED IN ANY CONCRETE POUR. SUSPEND FORMS FROM ABOVE GRADE.
9. DRYPACK SHALL HAVE A MINIMUM 28 DAY STRENGTH OF 4,000 PSI.
10. GROUT SHALL HAVE A MINIMUM 28 DAY STRENGTH OF 4,000 PSI.
11. NON SHRINK GROUT SHALL BE MASTER BUILDER MASTER FLOW 928, OR APPROVED EQUIVALENT.
12. VOIDS DEEPER THAN 1" SHALL HAVE 3/8" AGGREGATE ADDED TO THE GROUT PER MANUFACTURES RECOMMENDATIONS.

PART VIII - REINFORCING

1. ALL REINFORCING STEEL SHALL BE ASTM A 615 GRADE 60 UNLESS NOTED OTHERWISE ON THE DRAWINGS OR IN THESE NOTES.
2. PROVIDE REINFORCING STEEL CONFORMING TO ASTM A 706 GRADE 60 FOR ALL REINFORCING STEEL REQUIRED TO BE WELDED AND WHERE NOTED ON THE DRAWINGS. FIELD WELDING OR BENDING OF REINFORCING IS NOT PERMITTED EXCEPT AS NOTED ON THE DRAWINGS.
   A. FIELD WELDING TO BE DONE BY WELDERS CERTIFIED BY THE AWS/CWI FOR REINFORCING STEEL. CONTINUOUS INSPECTION BY A DEPUTY INSPECTOR IS REQUIRED.
   B. SHOP WELDS MUST BE PERFORMED IN AN AISC-LICENSED FABRICATION SHOP.
3. NO KINKS ALLOWED IN THE REINFORCING BARS. SPLICES AND BENT OF BARS ARE IN ACCORDANCE WITH THE DRAWINGS AND DETAILS AND C.R.S.I. PUBLICATIONS.
4. REINFORCING BARS SHALL BE CLEANED PRIOR TO CONCRETE POUR.
5. ALL REINFORCING BAR COUPLERS SHALL BE BAR LOCK MBT SERIES L TYPE 2 COUPLER SYSTEM PER UES ER-319 OR APPROVED EQUIVALENT.

PART IX - WOOD NOTES AND CONDITION ASSESSMENT

1. GRADING SHALL BE PERFORMED USING THE ASTM D245 GRADING METHODOLOGY OR AN APPROVED GRADING HANDBOOK FOR THE ASSUMED WOOD SPECIES AND APPLICATION.
2. THE PHYSICAL CONDITION OF PRIMARY AND SECONDARY COMPONENTS IS TO BE EXAMINED, AND THE PRESENCE OF DEGRADATION IS TO BE NOTED.

PART X - EXISTING CONDITIONS

1. THE GENERAL CONTRACTOR SHALL VERIFY ALL DIMENSIONS AND CONDITIONS OF THE EXISTING BUILDING AT THE JOB SITE AND REPORT ANY DISCREPANCIES FROM ASSUMED CONDITIONS SHOWN ON THE DRAWINGS TO THE ARCHITECT AND ENGINEER PRIOR TO THE FABRICATION AND ERECTION OF ANY MEMBERS.
2. EXISTING CONSTRUCTION SHOWN ON THE DRAWINGS WAS OBTAINED FROM EXISTING CONSTRUCTION DOCUMENTS AND LIMITED SITE OBSERVATION. THESE DRAWINGS OF EXISTING CONSTRUCTION ARE AVAILABLE FOR CONTRACTOR USE. HOWEVER, THE AVAILABLE DRAWINGS OF EXISTING CONSTRUCTION ARE NOT NECESSARILY COMPLETE. THE CONTRACTOR SHALL FIELD VERIFY ALL PERTINENT INFORMATION.
3. DEMOLITION, CUTTING, DRILLING, ETC. OF EXISTING WORK SHALL BE PERFORMED WITH GREAT CARE SO AS NOT TO JEOPARDIZE THE STRUCTURAL INTEGRITY OF THE EXISTING BUILDING. IF ANY ARCHITECTURAL, STRUCTURAL, OR MEP MEMBERS NOT DESIGNATED FOR REMOVAL INTERFERE WITH THE NEW WORK, THE ARCHITECT SHALL BE NOTIFIED IMMEDIATELY AND APPROVAL OBTAINED PRIOR TO REMOVAL OF THOSE MEMBERS.
4. THE CONTRACTOR SHALL SAFELY SHORE EXISTING CONSTRUCTION WHEREVER EXISTING SUPPORTS ARE REMOVED TO ALLOW THE INSTALLATION OF NEW WORK. ALL SHORING METHODS AND SEQUENCING OF DEMOLITION SHALL BE THE RESPONSIBILITY OF THE CONTRACTOR AND HIS ENGINEER.
5. THE CONTRACTOR SHALL VERIFY THE LOCATION OF EXISTING UTILITIES PRIOR TO THE START OF CONSTRUCTION AND TAKE CARE TO PROTECT EXISTING UTILITIES THAT ARE TO REMAIN IN SERVICE.
6. THE CONTRACTOR SHALL REPAIR ALL DAMAGE CAUSED DURING CONSTRUCTION WITH SIMILAR MATERIALS AND WORKMANSHIP TO RESTORE CONDITIONS TO LEVELS ACCEPTABLE TO THE ARCHITECT.
7. CONTRACTOR SHALL COMPLY WITH THE FACILITIES REQUIREMENTS FOR DUST AND INFECTION CONTROL AND PROVIDE BARRIERS AND NEGATIVE AIR PRESSURE AS NEEDED BUT NOT LIMITED TO FOR CONTROL FOR ALL WORK TO BE PERFORMED.

PART XI - CONTRACTOR SUBSTITUTIONS

1. ANY MATERIALS OR PRODUCTS SUBMITTED FOR APPROVAL THAT ARE DIFFERENT FROM THE MATERIAL OR PRODUCTS SPECIFIED IN THE STRUCTURAL CONTRACT DOCUMENTS WILL BE APPROVED ONLY IF THE FOLLOWING CRITERIA ARE SATISFIED:
   A. A COST SAVINGS TO THE OWNER IS DOCUMENTED AND SUBMITTED WITH THE REQUEST.
   B. THE MATERIAL OR PRODUCT HAS BEEN APPROVED BY THE INTERNATIONAL CODE COUNCIL (ICC) AND THE ICC REPORT IS SUBMITTED WITH THE REQUEST.
      1) THE ICC ESR THAT IS SUBMITTED MUST REFERENCE THE BUILDING CODE UNDER WHICH THE PROJECT IS PERMITTED.
      2) ICC REPORTS THAT HAVE BEEN DISCONTINUED AT THE TIME OF PRODUCT INSTALLATION WILL NOT BE ACCEPTED.
2. SUBMITTALS NOT SATISFYING THE ABOVE CRITERIA WILL NOT BE CONSIDERED.

PART XII - QUALITY CONTROL AND THE STRUCTURAL ENGINEER'S ROLE DURING CONSTRUCTION

1. THE ENGINEER SHALL NOT HAVE CONTROL NOR CHARGE OF, AND SHALL NOT BE RESPONSIBLE FOR, CONSTRUCTION MEANS, METHODS, TECHNIQUES, SEQUENCES, OR PROCEDURES, FOR SAFETY PRECAUTIONS AND PROGRAMS IN CONNECTION WITH THE WORK, FOR THE ACTS OR OMISSION OF THE CONTRACTOR, SUBCONTRACTOR, OR ANY OTHER PERSONS PERFORMING ANY OF THE WORK, OR FOR THE FAILURE OF ANY OF THEM TO CARRY OUT THE WORK IN ACCORDANCE WITH THE CONTRACT DOCUMENTS.
2. PERIODIC SITE OBSERVATION BY FIELD REPRESENTATIVES OF WALTER P. MOORE AND ASSOCIATES IS SOLELY FOR THE PURPOSE OF BECOMING GENERALLY FAMILIAR WITH THE PROGRESS AND QUALITY OF THE WORK COMPLETED AND DETERMINING, IN GENERAL, IF THE WORK OBSERVED IS BEING PERFORMED IN A MANNER INDICATING THAT THE WORK, WHEN FULLY COMPLETED, WILL BE IN ACCORDANCE WITH THE STRUCTURAL CONTRACT DOCUMENTS. THIS LIMITED SITE OBSERVATION SHOULD NOT BE CONSTRUED AS EXHAUSTIVE OR CONTINUOUS TO CHECK THE QUALITY OR QUANTITY OF THE WORK, BUT RATHER PERIODIC IN AN EFFORT TO KEEP THE OWNER REASONABLY INFORMED ABOUT THE PROGRESS AND QUALITY OF THE PORTION OF THE STRUCTURE COMPLETED.
3. UNLESS NOTED OTHERWISE, MATERIALS SHALL CONFORM AND TESTS AND INSPECTIONS SHALL BE PERFORMED BY THE APPROVED TESTING AGENCY AND/OR THE JOB INSPECTOR WHO IS APPROVED BY HCAI, THE AOR AND THE SEOR.

PART XIII - HCAI REQUIREMENT

HCAI APPROVAL IS REQUIRED FOR ALL CHANGES TO THE CONSTRUCTION DOCUMENTS PRIOR TO FABRICATION OR CONSTRUCTION (MATERIAL CHANGE) CAC 7-153

walter p moore

Walter P Moore and Associates, Inc.
633 West 5th St, Suite 7200
Los Angeles, CA 90071

310.254.1900
S09-24035-00

Client :

PIONEERS MEMORIAL HEALTHCARE DISTRICT

FACILITY ID : 10192

207 W LEGION RD,
BRAWLEY, CA 92227

Project :

MATERIAL TESTING AND CONDITION ASSESSMENT PROGRAM (MTCAP)

FOR
BLD-00767
ADMINISTRATION WING -BLDG 02

S09-24035-00

REVIEWED IN ACCORDANCE WITH THE REQUIREMENTS OF T24, CCR
APPROVED
Department of Health Care Access and Information
Office of Statewide Hospital Planning and Development
3/5/2026, 9:42:20 AM
S260022-13-00
Jacqueline Vu-Sancho

HCAI# S260022-13-00

Keyplan :

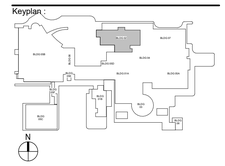

Issues/Revisions :

No.	Date	Description

Project Number : S09-24035-00
Drawn By : Author
Approved By : Approver
Checked By : Checker

Certification Statement :
TO THE BEST OF THE ENGINEER'S KNOWLEDGE, THE PLANS AND SPECIFICATIONS COMPLY WITH THE APPLICABLE MINIMUM BUILDING CODES.

Seal and Signature :

REGISTERED PROFESSIONAL ENGINEER
DHANAL AGARWAL
5954
EXP. 12/31/2027
STRUCTURAL
STATE OF CALIFORNIA

Engineer of Record, P.E.
Professional Engineer No.

Copyright (c) 2008 by Walter P. Moore and Associates, Inc.

This document and the information herein is the property of Walter Moore and Associates, Inc. No part hereof shall be duplicated, distributed, disclosed or used to any extent except as expressly authorized by Walter P. Moore and Inc. Any person, firm, or corporation receiving this however obtained, shall by virtue hereof, be deemed to have to the forgoing restrictions and that this document will be held in and confidence subject only to the private use expressly by Walter P. Moore and Associates,

Drawing Title:

GENERAL NOTES

Filename :

Sheet No. :

G-001

MATERIAL TESTING SUMMARY				
Test	**TEST TYPE**	**TEST LOCATION**	**NOMINAL MATERIAL STRENGHT**	**QUANTITY**
MT-1a	CONCRETE CORE	AT CONCRETE DIAPHRAGM	3,000 psi	3
MT-2a	CONCRETE CORE	IN R.C. SHEAR WALL	3,000 psi	3
MT-3a	REINFORCEMENT SAMPLES FOR REBAR	AT CONCRETE DIAPHRAGM	Fy= 60 ksi	1 AT PHASE 1 + 2 AT PHASE 2
MT-4a	REINFORCEMENT SAMPLES FOR REBAR	IN R.C. SHEAR WALL	Fy= 60 ksi	1 AT PHASE 1 + 2 AT PHASE 2
MT-5a	STEEL DECK	AT PENTHOUSE DIAPHRAGM	Fy=Unknown	1

NOTES:
1. LETTER "**a**" AFTER THE TEST NUMBER SIGNIFIES A PRIMARY TESTING LOCATION, FOR EXAMPLE "MT-1**a**".
2. IN THE PLANS, LETTER "b" AFTER THE TEST NUMBER SIGNIFIES A SECONDARY TESTING LOCATION , FOR EXAMPLE "MT-1**b**"
3. "**b**" SAMPLES ARE REQUIRED TO BE TESTED ONLY IF ACCEPTABLE RESULTS ARE NOT OBTAINED FROM "**a**" SAMPLE.
4. ADDITIONAL SAMPLES FOR MT-3a AND MT-4a PHASE 2 SHOULD ONLY BE TAKEN IF THE FIRST REBAR TEST RESULT FROM PHASE 1 DOES NOT ALIGNING WITH SPECIFIED STRENGTH ON THE ORIGINAL CONSTRUCTION DOCUMENTS.

CONDITION ASSESSMENT SUMMARY				
TEST	**INVESTIGATION TYPE**	**TEST LOCATION**	**QUANTITY**	**DETAIL REFERENCE**
CA-1c	CONDITION ASSESSMENT OFCONCRETE SHEAR WALL	CHECK WALL THICKNESS FOR 10" THICK WALL	2	1/S-802
CA-2c	CONDITION ASSESSMENT OFCONCRETE SHEAR WALL	CHECK WALL THICKNESS FOR 9" THICK WALL	2	2/S-802
CA-3c	CONDITION ASSESSMENT OFCONCRETE SHEAR WALL	HORIZONTAL AND VERTICAL REINFORCEMENT SIZE AND SPACING FOR THE 10" THICK WALL	2	1/S-802
CA-4c	CONDITION ASSESSMENT OFCONCRETE SHEAR WALL	HORIZONTAL AND VERTICAL REINFORCEMENT SIZE AND SPACING FOR THE 9" THICK WALL	2	2/S-802
CA-5c	CONDITION ASSESSMENT OF FOOTING TO WALL CONNECTION	WALL TO FOOTING CONNECTION	1	2/S-802
CA-6c	CONDITION ASSESSMENT OF SHEAR WALL TO SLAB CONNECTION	WALL TO SLAB CONNECTION	2	1/S-802 2/S-802
CA-7c	CONDITION ASSESSMENT OF FOOTING	DIMENSIONS OF FOOTING	1	2/S-802
CA-8c	CONDITION ASSESSMENT OF TRANSVERSE SLAB	THICKNESS OF THE SLAB AND TYPICAL REINFORCEMENT SIZE AND SPACING	2	3/S-802
CA-9c	CONDITION ASSESSMENT OF SPANDRELS	THICKNESS OF THE SPANDREL AND TYPICAL REINFORCEMENT SIZE AND SPACING	1	4/S-802
CA-10c	CONDITION ASSESSMENT OF DECK TO WALL CONNECTION	DECK TO WALL CONNECTION	2	1/S-803 2/S-803
CA-11c	CONDITION ASSESSMENT OF SEISMIC SEPARATION	CLEAR SPACING AT SEISMIC SEPARATION	2	1/S-802 1/S-803
CA-12c	CONDITION ASSESSMENT OF SEISMIC BRACING	SEISMIC BRACING AT PARTITION WALL	3	3/S-803
CA-13c	CONDITION ASSESSMENT OF DECK	DECK GAUGE AND DEPTH	1	1/S-803

NOTES:
1. LETTER "**c**" AFTER THE TEST NUMBER SIGNIFIES AN INVESTIGATION LOCATION FOR THE CONDITION ASSESSMENT PROGRAM, FOR EXAMPLE "1c".

walter p moore

Walter P Moore and Associates, Inc.
633 West 5th St, Suite 7200
Los Angeles, CA 90071

310.254.1900

PIONEERS MEMORIAL HEALTHCARE DISTRICT

FACILITY ID : 10192

207 W LEGION RD,
BRAWLEY, CA 92227

Project :

MATERIAL TESTING AND CONDITION ASSESSMENT PROGRAM (MTCAP)

FOR
BLD-00767
ADMINISTRATION WING
-BLDG 02

S09-24035-00

REVIEWED IN ACCORDANCE WITH THE REQUIREMENTS OF T24, CCR
APPROVED
Department of Health Care Access and Information
Office of Statewide Hospital Planning and Development
3/5/2026, 9:42:20 AM
S260022-13-00
Jacqueline Vu-Sancho

HCAI# S260022-13-00

Keyplan :

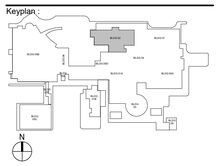

Issues/Revisions :

No.	Date	Description

Project Number :
S09-24035-00
Approved By :
Approver

Drawn By :
Author
Checked By :
Checker

Certification Statement :
TO THE BEST OF THE ENGINEER'S KNOWLEDGE, THE PLANS AND SPECIFICATIONS COMPLY WITH THE APPLICABLE MINIMUM BUILDING CODES.

Seal and Signature :

REGISTERED PROFESSIONAL ENGINEER
DIANA L. AGARWAL
5954
EXP. 12/31/2027
CIVIL
STATE OF CALIFORNIA

Engineer of Record, P.E.
Professional Engineer No.

Copyright (c) 2008 by Walter P. Moore and Associates, Inc.

This document and the information herein is the property of Walter Moore and Associates, Inc. No part hereof shall be duplicated, distributed, disclosed or used to any extent except as expressly authorized by Walter P. Moore and Inc. Any person, firm, or corporation receiving this however obtained, shall by virtue hereof, be deemed to have to the forgoing restrictions and that this document will be held in and confidence subject only to the private use expressly by Walter P. Moore and Associates.

Drawing Title:

MATERIAL TESTING AND CONDITION ASSESSMENT SUMMARY

Filename :

Sheet No. :

G-002

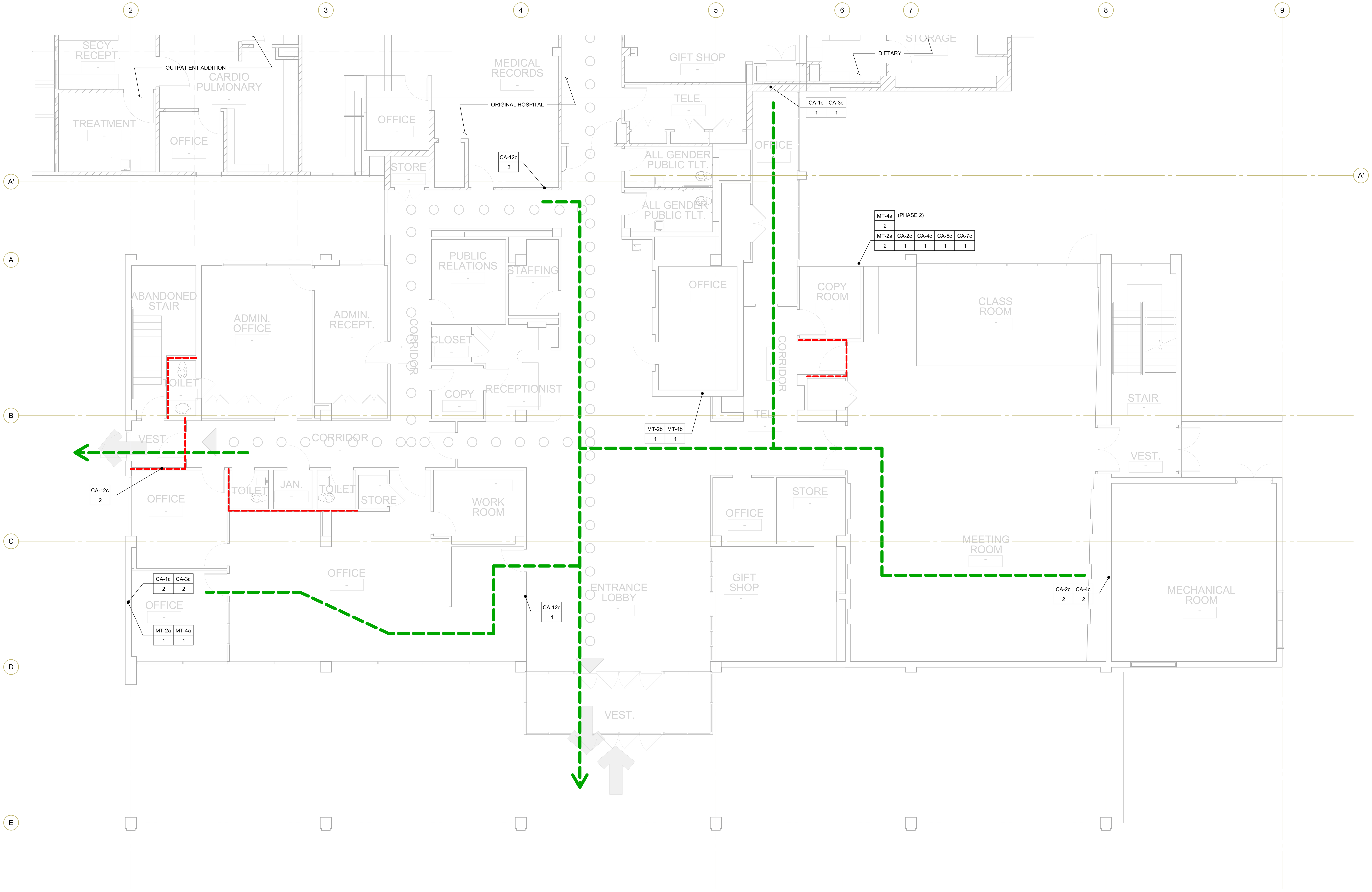

1 ARCHITECTURAL FIRST FLOOR PLAN

3/16" = 1'-0"

N

NOTES:

1. PER SHEET G-002 FOR TEST SAMPLE AND CONDITION ASSESSMENT SUMMARY.
2. PER PLAN TEST SAMPLE LOCATION AND TYPE — MT-1a: TYPE; 1: I.D.
3. 'MT' INDICATES MATERIAL TESTING.
4. 'CA' INDICATES CONDITION ASSESSMENT.
5. TOTAL # SAMPLES/VERIFICATIONS ARE FOR ENTIRE BTXUIDLING.
6. 'a' AFTER TEST #, INDICATES PRIMARY TEST LOCATION.
7. 'b' AFTER TEST #, INDICATES SECONDARY TEST LOCATION.
8. 'c' AFTER TEST #, INDICATES CONDITION ASSESSMENT LOCATION.

LEGEND:

EGRESS PATH

EXIST 2HR FIRE WALL

REQUIRED MATERIAL TESTING SAMPLES:

MT-2a	TOTAL OF 3 CONCRETE CORE FROM WALL
MT-4a	TOTAL OF 2 (1 AT PHASE AND 1 AT PHASE 2) REINFORCING STEEL FROM WALL

REQUIRED CONDITION ASSESSMENT SAMPLES:

CA-1c	TOTAL OF 2 CONDITION ASSESSMENT OF 10" CONCRETE SHEAR WALL
CA-2c	TOTAL OF 2 CONDITION ASSESSMENT OF 9" CONCRETE SHEAR WALL
CA-3c	TOTAL OF 2 CONDITION ASSESSMENT OF REINFORCEMNT FOR 10" CONCRETE SHEAR WALL
CA-4c	TOTAL OF 2 CONDITION ASSESSMENT OF REINFORCEMNT FOR 9" CONCRETE SHEAR WALL
CA-5c	TOTAL OF 1 CONDITION ASSESSMENT OF FOOTING TO WALL CONNECTION
CA-7c	TOTAL OF 1 CONDITION ASSESSMENT OF FOOTING
CA-12c	TOTAL OF 3 CONDITION ASSESSMENT OF SEISMIC BRACING

FIRE MARSHAL NOTES:

1. A FIRE WATCH SHALL BE CONDUCTED PER PIN 14 DURING ALL TIMES THATWORK IS PERFORMED WITHIN THE REQUIRED EGRESS WIDTH.
2. THE 8-FEET CORRIDOR SHALL NOT BE REDUCED TO LESS THAN A 44-INCH CLEAR WIDTH.
3. EQUIPMENT WITHIN THE CORRIDOR, SUCH AS LADDERS, SCAFFOLDING, CARTS, AND DUST BARRIERS SHALL BE COLLAPSIBLE AND/OR MOBILE.
4. A LOCATION SHALL BE PREDETERMINED FOR EQUIPMENT TO BE RAPIDLY RELOCATED OUTSIDE OF THE REQUIRED EGRESS WIDTH. THIS LOCATION(S)SHALL BE MAINTAINED CLEAR AND IMMEDIATELY ACCESSIBLE FROM THE CORRIDOR.
5. SPECIFIC CONSTRUCTION STAFF SHALL BE DESIGNATED AS PERSONS RESPONSIBLE FOR RESTORING THE FULL REQUIRED WIDTH OF THE CORRIDOR IMMEDIATELY UPON EMERGENCY.
6. THE EGRESS MAINTENANCE PLANS SHALL BE PRESENTED TO, AND ARE SUBJECT TO ACCEPTANCE BY, THE FIELD ALSO.
7. A FIRE WATCH, PER PIN 14, SHALL BE PROVIDED AT ALL TIMES THAT THE FIRE-RATED INTEGRITY OF WALLS ARE COMPROMISED.
8. OPENINGS CREATED IN FIRE-RATED ASSEMBLIES SHALL BE RESTORED WITHIN A 12-HOUR WORK SHIFT. OPENINGS THAT CANNOT BE RESTORED WITHIN 12-HOURS SHALL BE PROVIDED WITH TEMPORARY FIRE-RESISTIVE PATCHWORK UNTIL CONSTRUCTION OPERATIONS CAN RESUME. FOR SUCH CONDITIONS, CONTACT SEOR/AOR PRIOR TO PROCEED WITH THE WORK.
9. CONTRACTOR SHALL WORK SUCH THAT THE OPENINGS IN FIRE-RATED CONSTRUCTION IS LIMITED TO A SINGLE SMOKE COMPARTMENT AT ANY GIVEN TIME. SEE PLANS FOR FIRE WALLS AND SMOKE BARRIERS.
10. CONTRACTOR AND TESTING LAB SHALL DISCUSS THE ABOVE PROCEDURES WITH THE FIELD FLSO PRIOR TO PROCEEDING WITH THE WORK.

walter p moore

Walter P Moore and Associates, Inc.
633 West 5th St, Suite 7200
Los Angeles, CA 90071

310.254.1900

PIONEERS
MEMORIAL HEALTHCARE DISTRICT

FACILITY ID : 10192

207 W LEGION RD,
BRAWLEY, CA 92227

Project :

MATERIAL TESTING AND CONDITION ASSESSMENT PROGRAM (MTCAP)
FOR
BLD-00767
ADMINISTRATION WING -BLDG 02

S09-24035-00

REVIEWED IN ACCORDANCE WITH THE REQUIREMENTS OF T24, CCR
APPROVED
Department of Health Care Access and Information
Office of Statewide Hospital Planning and Development
3/5/2026, 9:42:20 AM
S260022-13-00
Jacqueline Vu-Sancho

HCAI# S260022-13-00

Keyplan :

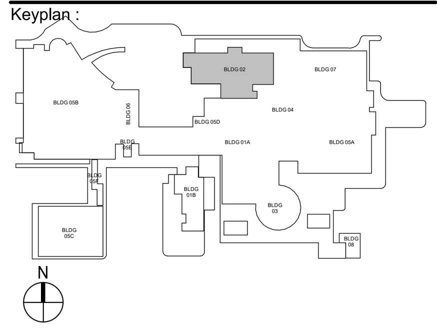

Issues/Revisions :

No.	Date	Description

Project Number : S09-24035-00	Drawn By : Author
Approved By : Approver	Checked By : Checker

Certification Statement :
TO THE BEST OF THE ENGINEER'S KNOWLEDGE, THE PLANS AND SPECIFICATIONS COMPLY WITH THE APPLICABLE MINIMUM BUILDING CODES.

Seal and Signature :

REGISTERED PROFESSIONAL ENGINEER
DHAWAL AGARWAL
5954
EXP. 12/31/2027
STRUCTURAL
STATE OF CALIFORNIA

Engineer of Record, P.E.
Professional Engineer No.

Copyright (c) 2008 by Walter P. Moore and Associates, Inc.

This document and the information herein is the property of Walter Moore and Associates, Inc. No part hereof shall be duplicated, distributed, disclosed or used to any extent except as expressly authorized by Walter P. Moore and Inc. Any person, firm, or corporation receiving this however obtained, shall by virtue hereof, be deemed to have to the forgoing restrictions and that this document will be held in and confidence subject only to the private use expressly by Walter P. Moore and Associates,

Drawing Title:

ARCHITECTURAL FIRST FLOOR PLAN

Filename :

Sheet No. :

A-101

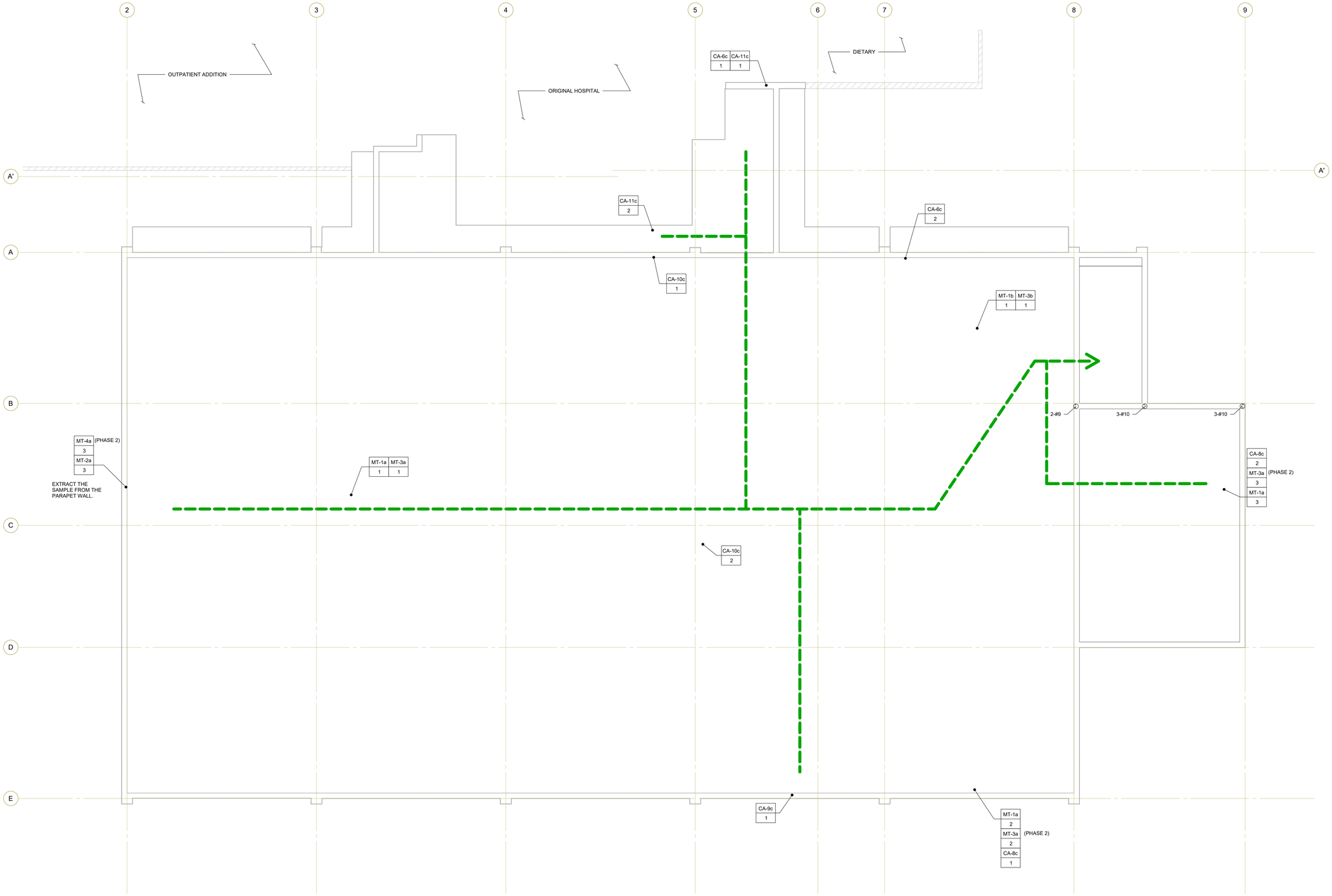

N

1 ARCHITECTURAL ROOF PLAN

3/16" = 1'-0"

NOTES:

1. PER SHEET G-002 FOR TEST SAMPLE AND CONDITION ASSESSMENT SUMMARY.
2. PER PLAN TEST SAMPLE LOCATION AND TYPE — MT-1a (TYPE), 1 (I.D.)
3. 'MT' INDICATES MATERIAL TESTING.
4. 'CA' INDICATES CONDITION ASSESSMENT.
5. TOTAL # SAMPLES/VERIFICATIONS ARE FOR ENTIRE BTXUIDLING.
6. 'a' AFTER TEST #, INDICATES PRIMARY TEST LOCATION.
7. 'b' AFTER TEST #, INDICATES SECONDARY TEST LOCATION.
8. 'c' AFTER TEST #, INDICATES CONDITION ASSESSMENT LOCATION.

LEGEND:

EGRESS PATH

EXIST 2HR FIRE WALL

REQUIRED MATERIAL TESTING SAMPLES:

MT-1a	TOTAL OF 3 CONCRETE CORE FROM DIAPHRAGM
MT-2a	TOTAL OF 1 CONCRETE CORE FROM WALL
MT-3a	TOTAL OF 3 (1 AT PHASE 1 + 2 AT PHASE 2) REINFORCING STEEL FROM DIAPHRAGM
MT-4a	TOTAL OF 1 (AT PHASE 2) REINFORCING STEEL FROM WALL

REQUIRED CONDITION ASSESSMENT SAMPLES:

CA-6c	TOTAL OF 2 CONDITION ASSESSMENT OF SHEAR WALL TO SLAB CONNECTION
CA-8c	TOTAL OF 2 CONDITION ASSESSMENT OF TRANSVERSE SLAB
CA-9c	TOTAL OF 1 CONDITION ASSESSMENT OF SPANDRELS
CA-10c	TOTAL OF 2 CONDITION ASSESSMENT OF DECK TO WALL CONNECTION
CA-11c	TOTAL OF 2 CONDITION ASSESSMENT OF SEISMIC SEPARATION

FIRE MARSHAL NOTES:

1. A FIRE WATCH SHALL BE CONDUCTED PER PIN 14 DURING ALL TIMES THATWORK IS PERFORMED WITHIN THE REQUIRED EGRESS WIDTH.
2. THE 8-FEET CORRIDOR SHALL NOT BE REDUCED TO LESS THAN A 44-INCH CLEAR WIDTH.
3. EQUIPMENT WITHIN THE CORRIDOR, SUCH AS LADDERS, SCAFFOLDING, CARTS, AND DUST BARRIERS SHALL BE COLLAPSIBLE AND/OR MOBILE.
4. A LOCATION SHALL BE PREDETERMINED FOR EQUIPMENT TO BE RAPIDLY RELOCATED OUTSIDE OF THE REQUIRED EGRESS WIDTH. THIS LOCATION(S)SHALL BE MAINTAINED CLEAR AND IMMEDIATELY ACCESSIBLE FROM THE CORRIDOR.
5. SPECIFIC CONSTRUCTION STAFF SHALL BE DESIGNATED AS PERSONS RESPONSIBLE FOR RESTORING THE FULL REQUIRED WIDTH OF THE CORRIDOR IMMEDIATELY UPON EMERGENCY.
6. THE EGRESS MAINTENANCE PLANS SHALL BE PRESENTED TO, AND ARE SUBJECT TO ACCEPTANCE BY, THE FIELD ALSO.
7. A FIRE WATCH, PER PIN 14, SHALL BE PROVIDED AT ALL TIMES THAT THE FIRE-RATED INTEGRITY OF WALLS ARE COMPROMISED.
8. OPENINGS CREATED IN FIRE-RATED ASSEMBLIES SHALL BE RESTORED WITHIN A 12-HOUR WORK SHIFT. OPENINGS THAT CANNOT BE RESTORED WITHIN 12-HOURS SHALL BE PROVIDED WITH TEMPORARY FIRE-RESISTIVE PATCHWORK UNTIL CONSTRUCTION OPERATIONS CAN RESUME. FOR SUCH CONDITIONS, CONTACT SEOR/AOR PRIOR TO PROCEED WITH THE WORK.
9. CONTRACTOR SHALL WORK SUCH THAT THE OPENINGS IN FIRE-RATED CONSTRUCTION IS LIMITED TO A SINGLE SMOKE COMPARTMENT AT ANY GIVEN TIME. SEE PLANS FOR FIRE WALLS AND SMOKE BARRIERS.
10. CONTRACTOR AND TESTING LAB SHALL DISCUSS THE ABOVE PROCEDURES WITH THE FIELD FLSO PRIOR TO PROCEEDING WITH THE WORK.

walter p moore

Walter P Moore and Associates, Inc.
633 West 5th St, Suite 7200
Los Angeles, CA 90071

310.254.1900

PIONEERS MEMORIAL HEALTHCARE DISTRICT

FACILITY ID : 10192

207 W LEGION RD,
BRAWLEY, CA 92227

Project :

MATERIAL TESTING AND CONDITION ASSESSMENT PROGRAM (MTCAP)

FOR
BLD-00767
ADMINISTRATION WING
-BLDG 02

S09-24035-00

REVIEWED IN ACCORDANCE WITH THE REQUIREMENTS OF T24, CCR
APPROVED
Department of Health Care Access and Information
Office of Statewide Hospital Planning and Development
3/5/2026, 9:42:20 AM
S260022-13-00
Jacqueline Vu-Sancho

HCAI# S260022-13-00

Keyplan :

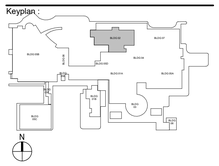

Issues/Revisions :

No.	Date	Description

Project Number : S09-24035-00
Approved By : Approver
Drawn By : Author
Checked By : Checker

Certification Statement :
TO THE BEST OF THE ENGINEER'S KNOWLEDGE, THE PLANS AND SPECIFICATIONS COMPLY WITH THE APPLICABLE MINIMUM BUILDING CODES.

Seal and Signature :

REGISTERED PROFESSIONAL ENGINEER
DHAVAL AGARWAL
5954
EXP. 12/31/2027
CIVIL
STATE OF CALIFORNIA

Engineer of Record, P.E.
Professional Engineer No.

Copyright (c) 2008 by Walter P. Moore and Associates, Inc.

This document and the information herein is the property of Walter Moore and Associates, Inc. No part hereof shall be duplicated, distributed, disclosed or used to any extent except as expressly authorized by Walter P. Moore and Inc. Any person, firm, or corporation receiving this however obtained, shall by virtue hereof, be deemed to have to the forgoing restrictions and that this document will be held in and confidence subject only to the private use expressly by Walter P. Moore and Associates,

Drawing Title:

ARCHITECTURAL ROOF PLAN

Filename :

Sheet No. :

A-102

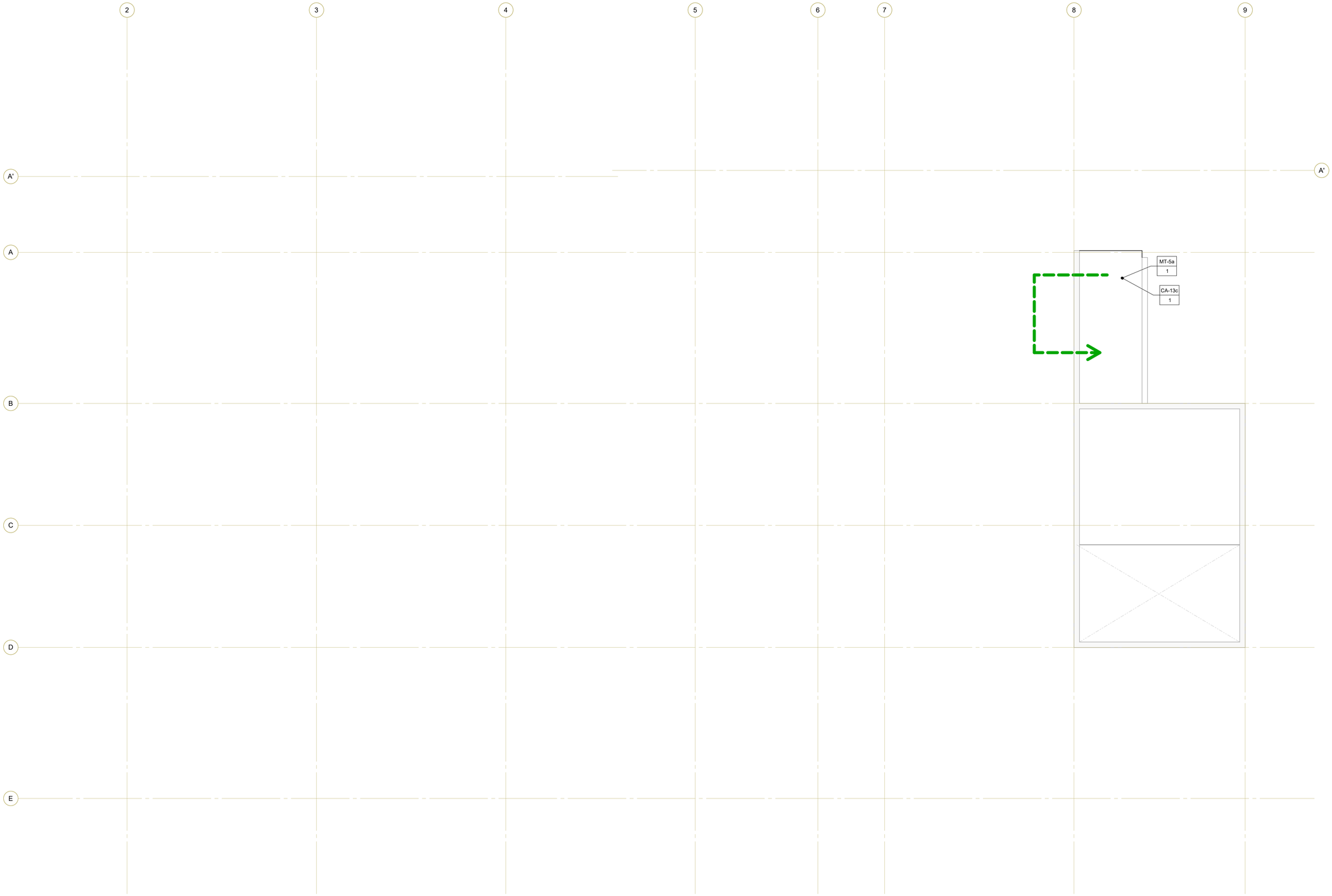

N

1 ARCHITECTURAL PENTHOUSE ROOF PLAN

3/16" = 1'-0"

NOTES:

1. PER SHEET G-002 FOR TEST SAMPLE AND CONDITION ASSESSMENT SUMMARY.
2. PER PLAN TEST SAMPLE LOCATION AND TYPE — MT-1a TYPE; 1 I.D.
3. 'MT' INDICATES MATERIAL TESTING.
4. 'CA' INDICATES CONDITION ASSESSMENT.
5. TOTAL # SAMPLES/VERIFICATIONS ARE FOR ENTIRE BTXUIDLING.
6. 'a' AFTER TEST #, INDICATES PRIMARY TEST LOCATION.
7. 'b' AFTER TEST #, INDICATES SECONDARY TEST LOCATION.
8. 'c' AFTER TEST #, INDICATES CONDITION ASSESSMENT LOCATION.

LEGEND:

EGRESS PATH

EXIST 2HR FIRE WALL

REQUIRED MATERIAL TESTING SAMPLES:

MT-5a — TOTAL OF 1 STEEL DECK SAMPLE FROM DIAPHRAGMS

REQUIRED CONDITION ASSESSMENT SAMPLES:

CA-13c — TOTAL OF 1 CONDITION ASSESSMENT OF DECK, GAUGE AND DEPTH

FIRE MARSHAL NOTES:

1. A FIRE WATCH SHALL BE CONDUCTED PER PIN 14 DURING ALL TIMES THATWORK IS PERFORMED WITHIN THE REQUIRED EGRESS WIDTH.
2. THE 8-FEET CORRIDOR SHALL NOT BE REDUCED TO LESS THAN A 44-INCH CLEAR WIDTH.
3. EQUIPMENT WITHIN THE CORRIDOR, SUCH AS LADDERS, SCAFFOLDING, CARTS, AND DUST BARRIERS SHALL BE COLLAPSIBLE AND/OR MOBILE.
4. A LOCATION SHALL BE PREDETERMINED FOR EQUIPMENT TO BE RAPIDLY RELOCATED OUTSIDE OF THE REQUIRED EGRESS WIDTH. THIS LOCATION(S)SHALL BE MAINTAINED CLEAR AND IMMEDIATELY ACCESSIBLE FROM THE CORRIDOR.
5. SPECIFIC CONSTRUCTION STAFF SHALL BE DESIGNATED AS PERSONS RESPONSIBLE FOR RESTORING THE FULL REQUIRED WIDTH OF THE CORRIDOR IMMEDIATELY UPON EMERGENCY.
6. THE EGRESS MAINTENANCE PLANS SHALL BE PRESENTED TO, AND ARE SUBJECT TO ACCEPTANCE BY, THE FIELD ALSO.
7. A FIRE WATCH, PER PIN 14, SHALL BE PROVIDED AT ALL TIMES THAT THE FIRE-RATED INTEGRITY OF WALLS ARE COMPROMISED.
8. OPENINGS CREATED IN FIRE-RATED ASSEMBLIES SHALL BE RESTORED WITHIN A 12-HOUR WORK SHIFT. OPENINGS THAT CANNOT BE RESTORED WITHIN 12-HOURS SHALL BE PROVIDED WITH TEMPORARY FIRE-RESISTIVE PATCHWORK UNTIL CONSTRUCTION OPERATIONS CAN RESUME. FOR SUCH CONDITIONS, CONTACT SEOR/AOR PRIOR TO PROCEED WITH THE WORK.
9. CONTRACTOR SHALL WORK SUCH THAT THE OPENINGS IN FIRE-RATED CONSTRUCTION IS LIMITED TO A SINGLE SMOKE COMPARTMENT AT ANY GIVEN TIME. SEE PLANS FOR FIRE WALLS AND SMOKE BARRIERS.
10. CONTRACTOR AND TESTING LAB SHALL DISCUSS THE ABOVE PROCEDURES WITH THE FIELD FLSO PRIOR TO PROCEEDING WITH THE WORK.

walter p moore

Walter P Moore and Associates, Inc.
633 West 5th St, Suite 7200
Los Angeles, CA 90071

310.254.1900

PIONEERS MEMORIAL HEALTHCARE DISTRICT

FACILITY ID : 10192

207 W LEGION RD,
BRAWLEY, CA 92227

Project :

MATERIAL TESTING AND CONDITION ASSESSMENT PROGRAM (MTCAP)

FOR
BLD-00767
ADMINISTRATION WING
-BLDG 02

S09-24035-00

REVIEWED IN ACCORDANCE WITH THE REQUIREMENTS OF T24, CCR
APPROVED
Department of Health Care Access and Information
Office of Statewide Hospital Planning and Development
3/5/2026, 9:42:20 AM
S260022-13-00
Jacqueline Vu-Sancho

HCAI# S260022-13-00

Keyplan :

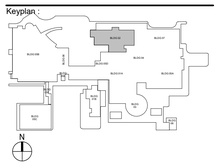

Issues/Revisions :

No.	Date	Description

Project Number : S09-24035-00
Drawn By : Author
Approved By : Approver
Checked By : Checker

Certification Statement :
TO THE BEST OF THE ENGINEER'S KNOWLEDGE, THE PLANS AND SPECIFICATIONS COMPLY WITH THE APPLICABLE MINIMUM BUILDING CODES.

Seal and Signature :

REGISTERED PROFESSIONAL ENGINEER
DIANA L. AGARWAL
5954
EXP. 12/31/2027
CIVIL
STATE OF CALIFORNIA

Engineer of Record, P.E.
Professional Engineer No.

Copyright (c) 2008 by Walter P. Moore and Associates, Inc.

This document and the information herein is the property of Walter Moore and Associates, Inc. No part hereof shall be duplicated, distributed, disclosed or used to any extent except as expressly authorized by Walter P. Moore and Inc. Any person, firm, or corporation receiving this however obtained, shall by virtue hereof, be deemed to have to the forgoing restrictions and that this document will be held in and confidence subject only to the private use expressly by Walter P. Moore and Associates.

Drawing Title:

ARCHITECTURAL PENTHOUSE ROOF PLAN

Filename :

Sheet No. :

A-103

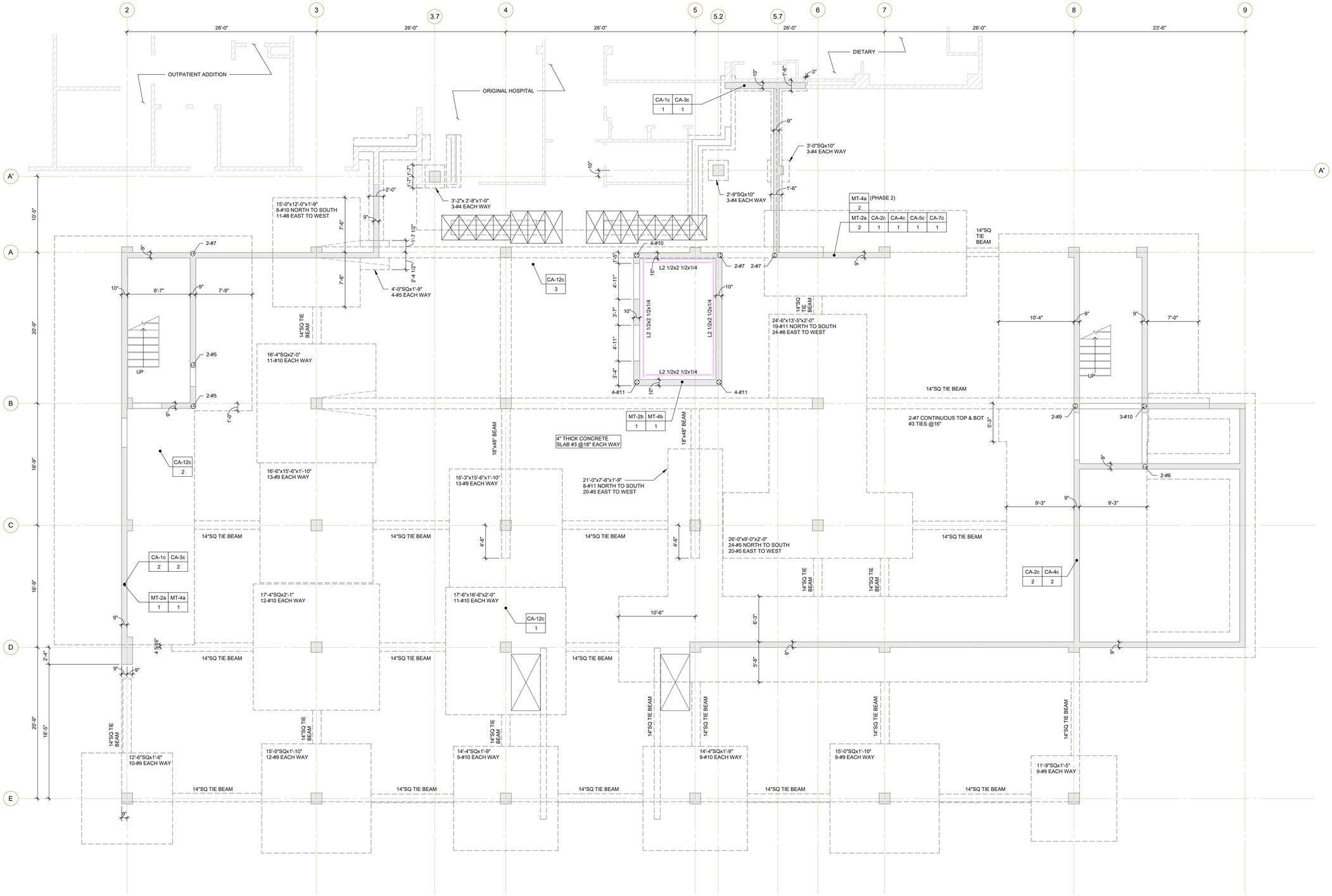

1 FOUNDATION AND FIRST FLOOR PLAN

3/16" = 1'-0"

NOTES:

1. PER SHEET G-002 FOR TEST SAMPLE AND CONDITION ASSESSMENT SUMMARY.
2. PER PLAN TEST SAMPLE LOCATION AND TYPE — MT-1a TYPE; 1 I.D.
3. 'MT' INDICATES MATERIAL TESTING.
4. 'CA' INDICATES CONDITION ASSESSMENT.
5. TOTAL # SAMPLES/VERIFICATIONS ARE FOR ENTIRE BTXUIDLING.
6. 'a' AFTER TEST #, INDICATES PRIMARY TEST LOCATION.
7. 'b' AFTER TEST #, INDICATES SECONDARY TEST LOCATION.
8. 'c' AFTER TEST #, INDICATES CONDITION ASSESSMENT LOCATION.

REQUIRED MATERIAL TESTING SAMPLES:

MT-2a	TOTAL OF 3 CONCRETE CORE FROM WALL
MT-4a	TOTAL OF 2 (1 AT PHASE AND 1 AT PHASE 2) REINFORCING STEEL FROM WALL

REQUIRED CONDITION ASSESSMENT SAMPLES:

CA-1c	TOTAL OF 2 CONDITION ASSESSMENT OF 10" CONCRETE SHEAR WALL
CA-2c	TOTAL OF 2 CONDITION ASSESSMENT OF 9" CONCRETE SHEAR WALL
CA-3c	TOTAL OF 2 CONDITION ASSESSMENT OF REINFORCEMNT FOR 10" CONCRETE SHEAR WALL
CA-4c	TOTAL OF 2 CONDITION ASSESSMENT OF REINFORCEMNT FOR 9" CONCRETE SHEAR WALL
CA-5c	TOTAL OF 1 CONDITION ASSESSMENT OF FOOTING TO WALL CONNECTION
CA-7c	TOTAL OF 1 CONDITION ASSESSMENT OF FOOTING
CA-12c	TOTAL OF 3 CONDITION ASSESSMENT OF SEISMIC BRACING

walter p moore

Walter P Moore and Associates, Inc.
633 West 5th St, Suite 7200
Los Angeles, CA 90071

310.254.1900

PIONEERS MEMORIAL HEALTHCARE DISTRICT

FACILITY ID : 10192

207 W LEGION RD,
BRAWLEY, CA 92227

Project :

MATERIAL TESTING AND CONDITION ASSESSMENT PROGRAM (MTCAP)

FOR

BLD-00767
ADMINISTRATION WING
-BLDG 02

S09-24035-00

REVIEWED IN ACCORDANCE WITH THE REQUIREMENTS OF T24, CCR
APPROVED
Department of Health Care Access and Information
Office of Statewide Hospital Planning and Development
3/5/2026, 9:42:20 AM
S260022-13-00
Jacqueline Vu-Sancho

HCAI# S260022-13-00

Keyplan :

Issues/Revisions :

No.	Date	Description

Project Number : S09-24035-00
Drawn By : FF
Approved By : DA
Checked By : DA

Certification Statement :
TO THE BEST OF THE ENGINEER'S KNOWLEDGE, THE PLANS AND SPECIFICATIONS COMPLY WITH THE APPLICABLE MINIMUM BUILDING CODES.

Seal and Signature :

REGISTERED PROFESSIONAL ENGINEER
DHANAL AGARWAL
5954
Exp. 12/31/2027
STRUCTURAL
STATE OF CALIFORNIA

Engineer of Record, P.E.
Professional Engineer No.

Copyright (c) 2008 by Walter P. Moore and Associates, Inc.

This document and the information herein is the property of Walter Moore and Associates, Inc. No part hereof shall be duplicated, distributed, disclosed or used to any extent except as expressly authorized by Walter P. Moore and Inc. Any person, firm, or corporation receiving this however obtained, shall by virtue hereof, be deemed to have to the forgoing restrictions and that this document will be held in and confidence subject only to the private use expressly by Walter P. Moore and Associates,

Drawing Title:

FOUNDATION AND FIRST FLOOR PLAN

Filename :

Sheet No. :

S-101

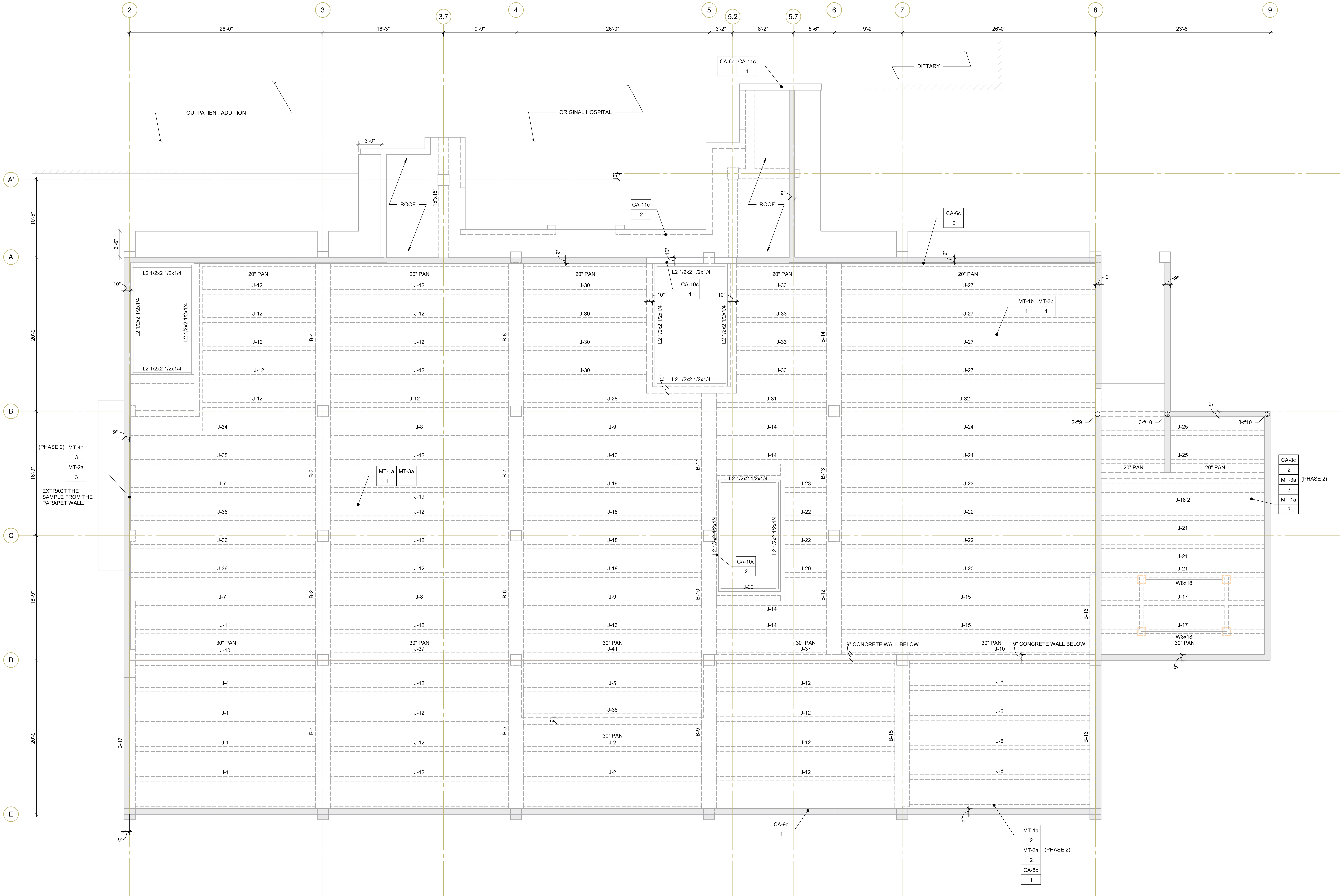

1 ROOF FRAMING PLAN

3/16" = 1'-0"

N

NOTES:

1. PER SHEET G-002 FOR TEST SAMPLE AND CONDITION ASSESSMENT SUMMARY.
2. PER PLAN TEST SAMPLE LOCATION AND TYPE

MT-1a	TYPE
1	I.D.

3. 'MT' INDICATES MATERIAL TESTING.
4. 'CA' INDICATES CONDITION ASSESSMENT.
5. TOTAL # SAMPLES/VERIFICATIONS ARE FOR ENTIRE BTXUIDLING.
6. 'a' AFTER TEST #, INDICATES PRIMARY TEST LOCATION.
7. 'b' AFTER TEST #, INDICATES SECONDARY TEST LOCATION.
8. 'c' AFTER TEST #, INDICATES CONDITION ASSESSMENT LOCATION.

REQUIRED MATERIAL TESTING SAMPLES:

MT-1a	TOTAL OF 3 CONCRETE CORE FROM DIAPHRAGM
MT-2a	TOTAL OF 1 CONCRETE CORE FROM WALL
MT-3a	TOTAL OF 3 (1 AT PHASE 1 + 2 AT PHASE 2) REINFORCING STEEL FROM DIAPHRAGM
MT-4a	TOTAL OF 1 (AT PHASE 2) REINFORCING STEEL FROM WALL

REQUIRED CONDITION ASSESSMENT SAMPLES:

CA-6c	TOTAL OF 2 CONDITION ASSESSMENT OF SHEAR WALL TO SLAB CONNECTION
CA-8c	TOTAL OF 2 CONDITION ASSESSMENT OF TRANSVERSE SLAB
CA-9c	TOTAL OF 1 CONDITION ASSESSMENT OF SPANDRELS
CA-10c	TOTAL OF 2 CONDITION ASSESSMENT OF DECK TO WALL CONNECTION
CA-11c	TOTAL OF 2 CONDITION ASSESSMENT OF SEISMIC SEPARATION

walter p moore

Walter P Moore and Associates, Inc.
633 West 5th St, Suite 7200
Los Angeles, CA 90071

310.254.1900

PIONEERS MEMORIAL HEALTHCARE DISTRICT

FACILITY ID : 10192

207 W LEGION RD,
BRAWLEY, CA 92227

Project :

MATERIAL TESTING AND CONDITION ASSESSMENT PROGRAM (MTCAP)
FOR
BLD-00767
ADMINISTRATION WING -BLDG 02

S09-24035-00

REVIEWED IN ACCORDANCE WITH THE REQUIREMENTS OF T24, CCR
APPROVED
Department of Health Care Access and Information
Office of Statewide Hospital Planning and Development
3/5/2026, 9:42:20 AM
S260022-13-00
Jacqueline Vu-Sancho

HCAI# S260022-13-00

Keyplan :

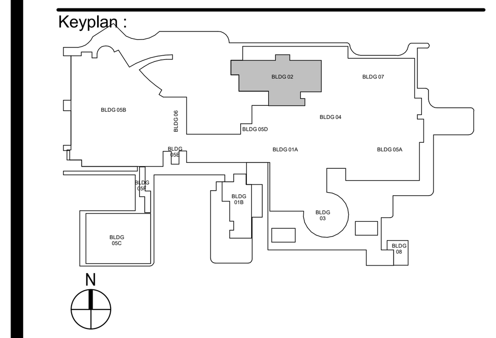

Issues/Revisions :

No.	Date	Description

Project Number : S09-24035-00
Drawn By : Author
Approved By : Approver
Checked By : Checker

Certification Statement :
TO THE BEST OF THE ENGINEER'S KNOWLEDGE, THE PLANS AND SPECIFICATIONS COMPLY WITH THE APPLICABLE MINIMUM BUILDING CODES.

Seal and Signature :

REGISTERED PROFESSIONAL ENGINEER
DHAWAL AGARWAL
5954
EXP. 12/31/2027
STRUCTURAL
STATE OF CALIFORNIA

Engineer of Record, P.E.
Professional Engineer No.

Copyright (c) 2008 by Walter P. Moore and Associates, Inc.

This document and the information herein is the property of Walter Moore and Associates, Inc. No part hereof shall be duplicated, distributed, disclosed or used to any extent except as expressly authorized by Walter P. Moore and Inc. Any person, firm, or corporation receiving this however obtained, shall by virtue hereof, be deemed to have to the forgoing restrictions and that this document will be held in and confidence subject only to the private use expressly by Walter P. Moore and Associates,

Drawing Title:

ROOF FRAMING PLAN

Filename :

Sheet No. :

S-102

N

1 PENTHOUSE FRAMING PLAN

3/16" = 1'-0"

NOTES:

1. PER SHEET G-002 FOR TEST SAMPLE AND CONDITION ASSESSMENT SUMMARY.
2. PER PLAN TEST SAMPLE LOCATION AND TYPE

MT-1a	TYPE
1	I.D.

3. 'MT' INDICATES MATERIAL TESTING.
4. 'CA' INDICATES CONDITION ASSESSMENT.
5. TOTAL # SAMPLES/VERIFICATIONS ARE FOR ENTIRE BTXUIDLING.
6. 'a' AFTER TEST #, INDICATES PRIMARY TEST LOCATION.
7. 'b' AFTER TEST #, INDICATES SECONDARY TEST LOCATION.
8. 'c' AFTER TEST #, INDICATES CONDITION ASSESSMENT LOCATION.

REQUIRED MATERIAL TESTING SAMPLES:

MT-5a	TOTAL OF 1 STEEL DECK SAMPLE FROM DIAPHRAGMS

REQUIRED CONDITION ASSESSMENT SAMPLES:

CA-13c	TOTAL OF 1 CONDITION ASSESSMENT OF DECK, GAUGE AND DEPTH

walter p moore

Walter P Moore and Associates, Inc.
633 West 5th St, Suite 7200
Los Angeles, CA 90071

310.254.1900

PIONEERS MEMORIAL HEALTHCARE DISTRICT

FACILITY ID : 10192

207 W LEGION RD,
BRAWLEY, CA 92227

Project :

MATERIAL TESTING AND CONDITION ASSESSMENT PROGRAM (MTCAP)

FOR
BLD-00767
ADMINISTRATION WING
-BLDG 02

S09-24035-00

REVIEWED IN ACCORDANCE WITH THE REQUIREMENTS OF T24, CCR
APPROVED
Department of Health Care Access and Information
Office of Statewide Hospital Planning and Development
3/5/2026, 9:42:20 AM
S260022-13-00
Jacqueline Vu-Sancho

HCAI# S260022-13-00

Keyplan :

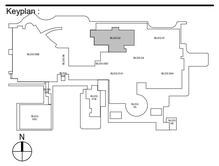

Issues/Revisions :

No.	Date	Description

Project Number : S09-24035-00
Approved By : Approver
Drawn By : Author
Checked By : Checker

Certification Statement :
TO THE BEST OF THE ENGINEER'S KNOWLEDGE, THE PLANS AND SPECIFICATIONS COMPLY WITH THE APPLICABLE MINIMUM BUILDING CODES.

Seal and Signature :

REGISTERED PROFESSIONAL ENGINEER
DHAVAL AGARWAL
5954
EXP. 12/31/2027
CIVIL
STATE OF CALIFORNIA

Engineer of Record, P.E.
Professional Engineer No.

Copyright (c) 2008 by Walter P. Moore and Associates, Inc.

This document and the information herein is the property of Walter Moore and Associates, Inc. No part hereof shall be duplicated, distributed, disclosed or used to any extent except as expressly authorized by Walter P. Moore and Inc. Any person, firm, or corporation receiving this however obtained, shall by virtue hereof, be deemed to have to the forgoing restrictions and that this document will be held in and confidence subject only to the private use expressly by Walter P. Moore and Associates,

Drawing Title:

PENTHOUSE FRAMING PLAN

Filename :

Sheet No. :

S-103

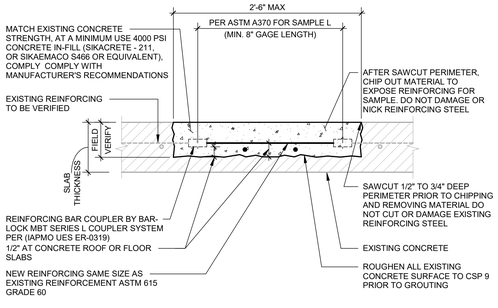

NOTES:
1. DO NOT OVERCUT SAWCUT CORNERS.
2. PRIOR TO CUTTING, USE NON-DESTRUCTIVE METHODS TO DETERMINE LOCATION OF REINFORCING.

4 CONCRETE SLAB REINFORCEMENT EXTRACTION & REPAIR DETAIL

3/4" = 1'-0"

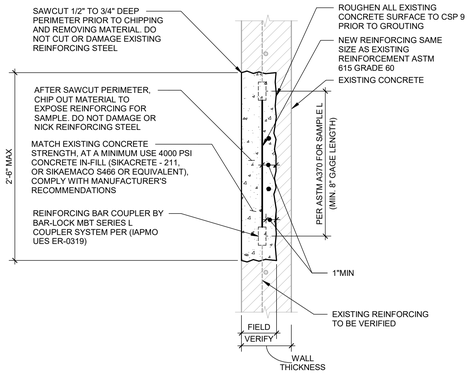

NOTES:
1. DO NOT OVERCUT SAWCUT CORNERS.
2. PRIOR TO CUTTING, USE NON-DESTRUCTIVE METHODS TO DETERMINE LOCATION OF REINFORCING.

3 CONCRETE WALL REINFORCEMENT EXTRACTION & REPAIR DETAIL

3/4" = 1'-0"

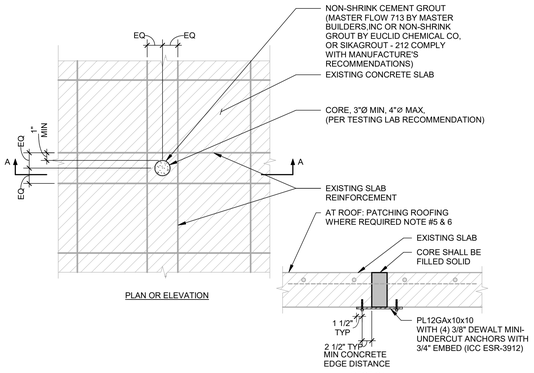

PLAN OR ELEVATION

SECTION A-A

NOTES:
1. BEFORE CORE DRILLING, USE NON-DESTRUCTIVE METHODS TO CHECK REBAR LOCATIONS PERIOD. THE CONCRETE CORES SHALL NOT BE TAKEN AT THE REINFORCING LOCATIONS.
2. REPAIR CORE HOLE BY INFILLING WITH NON-SHRINK GROUT WITH STRENGTH EQUAL TO EXISTING, BUT NOT LESS THAN 4000 PSI.
3. FOR LOCATION OF CONCRETE CORES IN SLABS REFER TO FLOOR PLANS AND SUMMARY TABLE.
4. ROUGHEN ALL EXISTING SURFACES TO 1/4" AMPLITUDE MINIMUM PRIOR GROUTING.
5. REMOVAL OF ROOFING WHERE OCCURS SHALL BE PATCHED BACK TO WATERTIGHT CONDITION TO MATCH EXISTING AFTER STRUCTURAL REPAIR.
6. PROVIDE TEMPORARY WATER PROOFING AS REQUIRED PRIOR TO FINAL REPAIR.

2 CONCRETE CORE EXTRACTION / REPAIR AT CONCRETE FLOOR OR ROOF

3/4" = 1'-0"

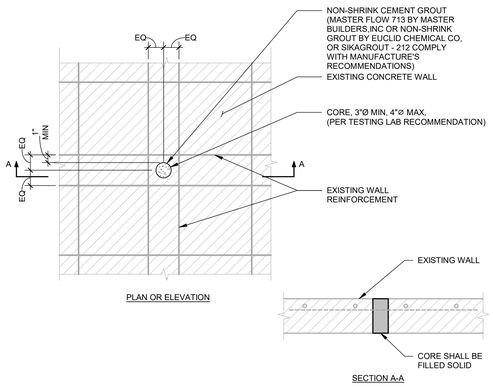

PLAN OR ELEVATION

SECTION A-A

NOTES:
1. BEFORE CORE DRILLING, USE NON-DESTRUCTIVE METHODS TO CHECK REBAR LOCATIONS PERIOD. THE CONCRETE CORES SHALL NOT BE TAKEN AT THE REINFORCING LOCATIONS.
2. REPAIR CORE HOLE BY INFILLING WITH NON-SHRINK GROUT WITH STRENGTH EQUAL TO EXISTING, BUT NOT LESS THAN 4000 PSI.
3. FOR LOCATION OF CONCRETE CORES IN WALLS REFER TO FLOOR PLANS AND SUMMARY TABLE.
4. ROUGHEN ALL EXISTING SURFACES TO 1/4" AMPLITUDE MINIMUM PRIOR GROUTING.
5. AT LOCATIONS WITH WATERPROOFING MEMBRANE, STOP PENETRATION SHORT OF WALL BACK FACE.

1 CONCRETE CORE EXTRACTION / REPAIR AT CONCRETE WALL

3/4" = 1'-0"

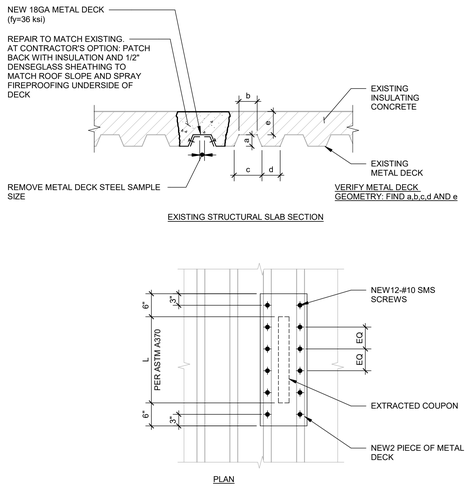

NOTE:
1. REMOVE METAL DECK SAMPLE, SIZE PER A370.

6 METAL DECK EXTRACTION AND REPAIR DETAIL

3/4" = 1'-0"

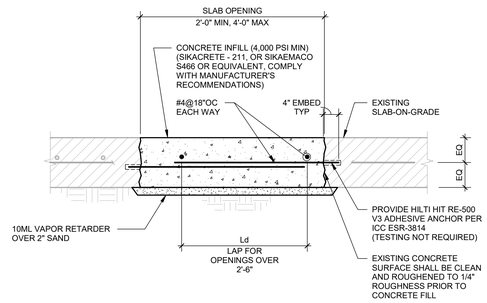

NOTES:
1. FOR OPENINGS LESS THAN 2'-6", PROVIDE STANDARD HOOK DOWELS.

5 TYPICAL EXISTING SLAB ON GRADE REMOVAL AND REPLACEMENT

3/4" = 1'-0"

walter p moore

Walter P Moore and Associates, Inc.
633 West 5th St, Suite 7200
Los Angeles, CA 90071

310.254.1900

PIONEERS MEMORIAL HEALTHCARE DISTRICT

FACILITY ID : 10192

207 W LEGION RD,
BRAWLEY, CA 92227

Project :

MATERIAL TESTING AND CONDITION ASSESSMENT PROGRAM (MTCAP)

FOR
BLD-00767
ADMINISTRATION WING
-BLDG 02

S09-24035-00

REVIEWED IN ACCORDANCE WITH THE REQUIREMENTS OF T24, CCR
APPROVED
Department of Health Care Access and Information
Office of Statewide Hospital Planning and Development
3/5/2026, 9:42:20 AM
S260022-13-00
Jacqueline Vu-Sancho

HCAI# S260022-13-00

Keyplan :

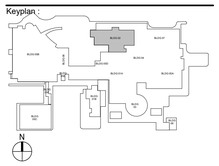

Issues/Revisions :

No.	Date	Description

Project Number : S09-24035-00
Drawn By : Author
Approved By : Approver
Checked By : Checker

Certification Statement :
TO THE BEST OF THE ENGINEER'S KNOWLEDGE, THE PLANS AND SPECIFICATIONS COMPLY WITH THE APPLICABLE MINIMUM BUILDING CODES.

Seal and Signature :

REGISTERED PROFESSIONAL ENGINEER
DHANVAL AGARWAL
5954
EXP. 12/31/2027
CIVIL
STATE OF CALIFORNIA

Engineer of Record, P.E.
Professional Engineer No.

Copyright (c) 2008 by Walter P. Moore and Associates, Inc.

This document and the information herein is the property of Walter Moore and Associates, Inc. No part hereof shall be duplicated, distributed, disclosed or used to any extent except as expressly authorized by Walter P. Moore and Inc. Any person, firm, or corporation receiving this however obtained, shall by virtue hereof, be deemed to have to the forgoing restrictions and that this document will be held in and confidence subject only to the private use expressly by Walter P. Moore and Associates,

Drawing Title:

TYPICAL MTCAP TESTING AND REPAIR DETAILS

Filename :

Sheet No. :

S-801

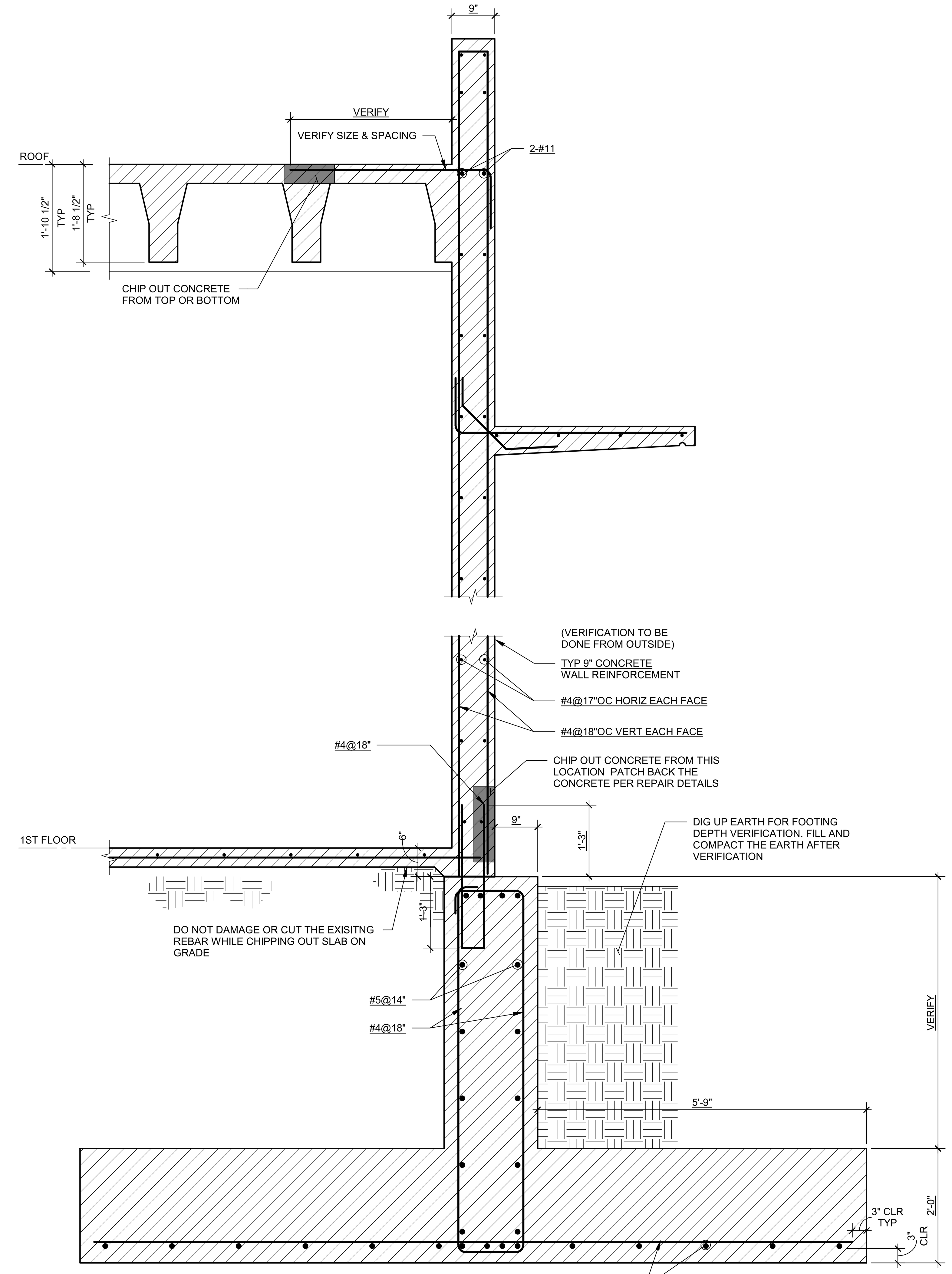

NOTES:
1. VERIFY ALL THE UNDERLINED INFORMATION. PLEASE SEE OTHER NOTES FOR ANY ADDITIONAL INVESTIGATION.
2. ACCEPTABLE TO HAVE ONE VERIFICATION USING DESTRUCTIVE METHOD AND OTHER SIMILAR VERIFICATION USING NON-DESTRUCTIVE METHOD.

2 VERIFICATION FOR CA-2c, CA-4c, CA-5c, CA-6c/2 AND CA-7c

3/4" = 1'-0"

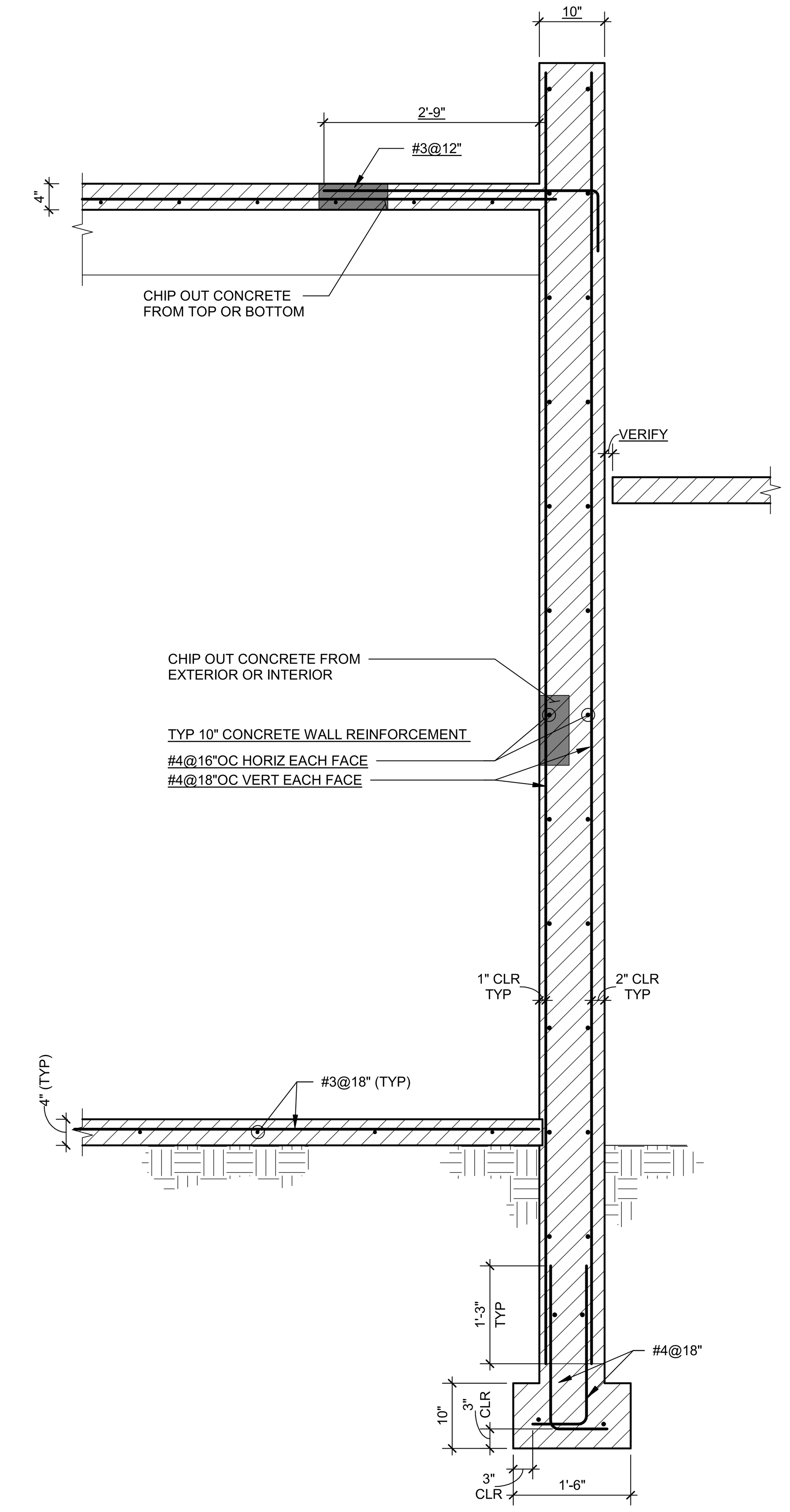

NOTES:
1. VERIFY ALL THE UNDERLINED INFORMATION. PLEASE SEE OTHER NOTES FOR ANY ADDITIONAL INVESTIGATION.
2. ACCEPTABLE TO HAVE ONE VERIFICATION USING DESTRUCTIVE METHOD AND OTHER SIMILAR VERIFICATION USING NON-DESTRUCTIVE METHOD.

1 VERIFICATION FOR CA-1c, CA-3c, CA-6c/1 AND CA-11c/1

3/4" = 1'-0"

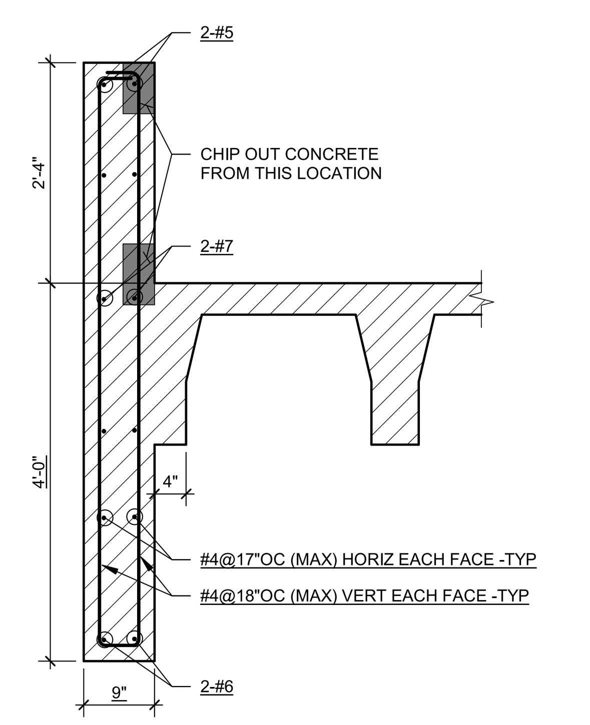

NOTES:
1. VERIFY ALL THE UNDERLINED INFORMATION. PLEASE SEE OTHER NOTES FOR ANY ADDITIONAL INVESTIGATION.
2. CHECK THE WALL TO SLAB CONNECTION AT LOCATION.
3. VERIFY THE SLAB THICKNESS AT THE LOCATION.
4. ACCEPTABLE TO HAVE ONE VERIFICATION USING DESTRUCTIVE METHOD AND OTHER SIMILAR VERIFICATION USING NON-DESTRUCTIVE METHOD

4 VERIFICATION FOR CA-9c

3/4" = 1'-0"

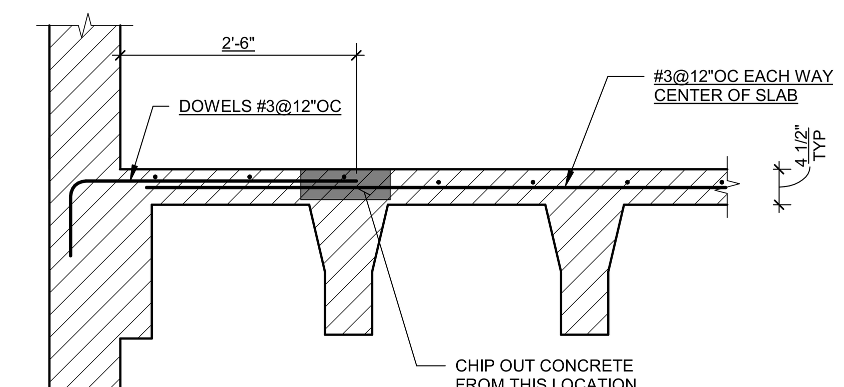

NOTES:
1. VERIFY ALL THE UNDERLINED INFORMATION. PLEASE SEE OTHER NOTES FOR ANY ADDITIONAL INVESTIGATION.
2. CHECK THE WALL TO SLAB CONNECTION AT LOCATION.
3. ACCEPTABLE TO HAVE ONE VERIFICATION USING DESTRUCTIVE METHOD AND OTHER SIMILAR VERIFICATION USING NON-DESTRUCTIVE METHOD

3 VERIFICATION FOR CA-8c

3/4" = 1'-0"

walter p moore

Walter P Moore and Associates, Inc.
633 West 5th St, Suite 7200
Los Angeles, CA 90071

310.254.1900

PIONEERS MEMORIAL HEALTHCARE DISTRICT

FACILITY ID : 10192

207 W LEGION RD,
BRAWLEY, CA 92227

Project :

MATERIAL TESTING AND CONDITION ASSESSMENT PROGRAM (MTCAP) FOR BLD-00767 ADMINISTRATION WING -BLDG 02

S09-24035-00

REVIEWED IN ACCORDANCE WITH THE REQUIREMENTS OF T24, CCR
APPROVED
Department of Health Care Access and Information
Office of Statewide Hospital Planning and Development
3/5/2026, 9:42:20 AM
S260022-13-00
Jacqueline Vu-Sancho

HCAI# S260022-13-00

Keyplan :

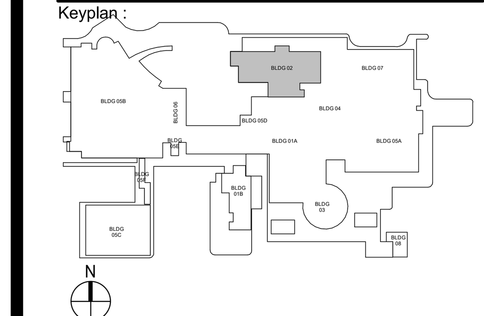

Issues/Revisions :

No.	Date	Description

Project Number : S09-24035-00
Drawn By : Author
Approved By : Approver
Checked By : Checker

Certification Statement :
TO THE BEST OF THE ENGINEER'S KNOWLEDGE, THE PLANS AND SPECIFICATIONS COMPLY WITH THE APPLICABLE MINIMUM BUILDING CODES.

Seal and Signature :

REGISTERED PROFESSIONAL ENGINEER
5954
EXP. 12/31/2027
STATE OF CALIFORNIA

Engineer of Record, P.E.
Professional Engineer No.

Copyright (c) 2008 by Walter P. Moore and Associates, Inc.

This document and the information herein is the property of Walter Moore and Associates, Inc. No part hereof shall be duplicated, distributed, disclosed or used to any extent except as expressly authorized by Walter P. Moore and Inc. Any person, firm, or corporation receiving this however obtained, shall by virtue hereof, be deemed to have to the forgoing restrictions and that this document will be held in and confidence subject only to the private use expressly by Walter P. Moore and Associates,

Drawing Title:

CONDITION ASSESSMENT DETAILS

Filename :

Sheet No. :

S-802

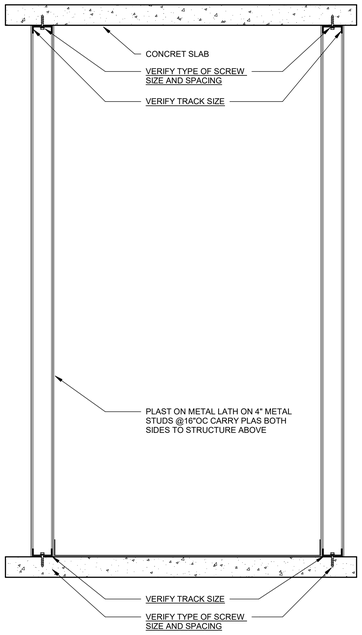

NOTES:
1. VERIFY ALL THE UNDERLINED INFORMATION.

3 VERIFICATION FOR CA-12c
1" = 1'-0"

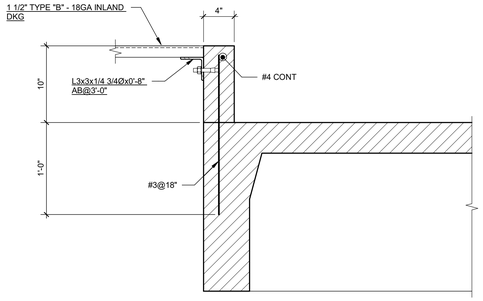

NOTES:
1. VERIFY ALL THE UNDERLINED INFORMATION.

2 VERIFICATION FOR CA-10c/2
1 1/2" = 1'-0"

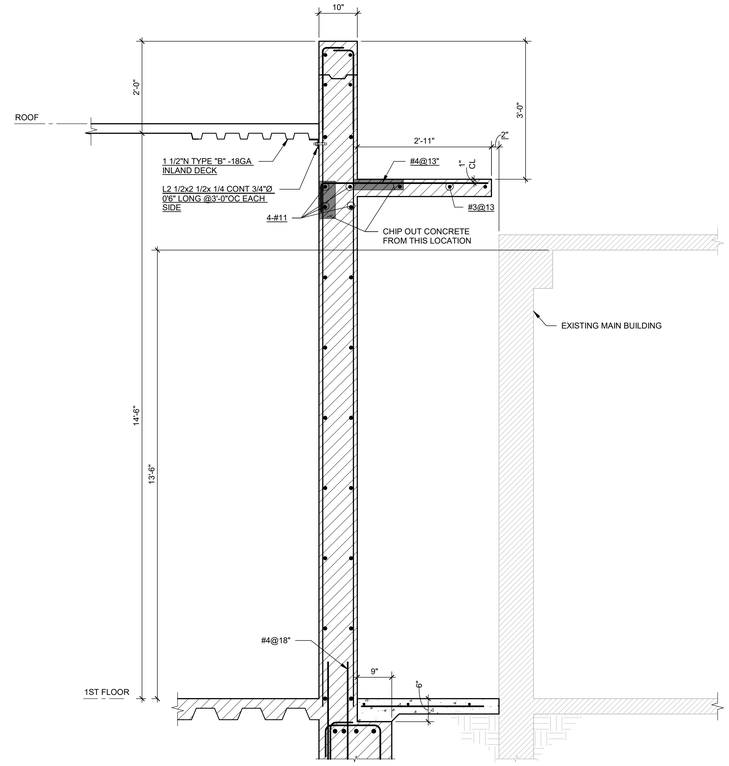

NOTES:
1. VERIFY ALL THE UNDERLINED INFORMATION. PLEASE SEE OTHER NOTES FOR ANY ADDITIONAL INVESTIGATION.
2. CHECK THE WALL TO FLOOR CONNECTION AT LOCATION.
3. ACCEPTABLE TO HAVE ONE VERIFICATION USING DESTRUCTIVE METHOD AND OTHER SIMILAR VERIFICATION USING NON-DESTRUCTIVE METHOD

1 VERIFICATION FOR CA-10c/1 CA-11c/2 & CA-13c
3/4" = 1'-0"

walter p moore

Walter P Moore and Associates, Inc.
633 West 5th St, Suite 7200
Los Angeles, CA 90071

310.254.1900

PIONEERS
MEMORIAL HEALTHCARE DISTRICT

FACILITY ID : 10192

207 W LEGION RD,
BRAWLEY, CA 92227

Project :

MATERIAL TESTING AND CONDITION ASSESSMENT PROGRAM (MTCAP)

FOR
BLD-00767
ADMINISTRATION WING
-BLDG 02

S09-24035-00

REVIEWED IN ACCORDANCE WITH THE REQUIREMENTS OF T24, CCR
APPROVED
Department of Health Care Access and Information
Office of Statewide Hospital Planning and Development
3/5/2026, 9:42:20 AM
S260022-13-00
Jacqueline Vu-Sancho

HCAI# S260022-13-00

Keyplan :

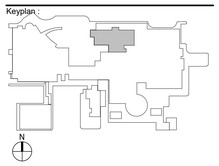

Issues/Revisions :

No.	Date	Description

Project Number : S09-24035-00
Drawn By : Author
Approved By : Approver
Checked By : Checker

Certification Statement :
TO THE BEST OF THE ENGINEER'S KNOWLEDGE, THE PLANS AND SPECIFICATIONS COMPLY WITH THE APPLICABLE MINIMUM BUILDING CODES.

Seal and Signature :

REGISTERED PROFESSIONAL ENGINEER
DIANA L. AGARWAL
5954
EXP. 12/31/2027
STATE OF CALIFORNIA

Engineer of Record, P.E.
Professional Engineer No.

Copyright (c) 2008 by Walter P. Moore and Associates, Inc.

This document and the information herein is the property of Walter Moore and Associates, Inc. No part hereof shall be duplicated, distributed, disclosed or used to any extent except as expressly authorized by Walter P. Moore and Inc. Any person, firm, or corporation receiving this however obtained, shall by virtue hereof, be deemed to have to the forgoing restrictions and that this document will be held in and confidence subject only to the private use expressly by Walter P. Moore and Associates,

Drawing Title:

CONDITION ASSESSMENT DETAILS

Filename :

Sheet No. :

S-803